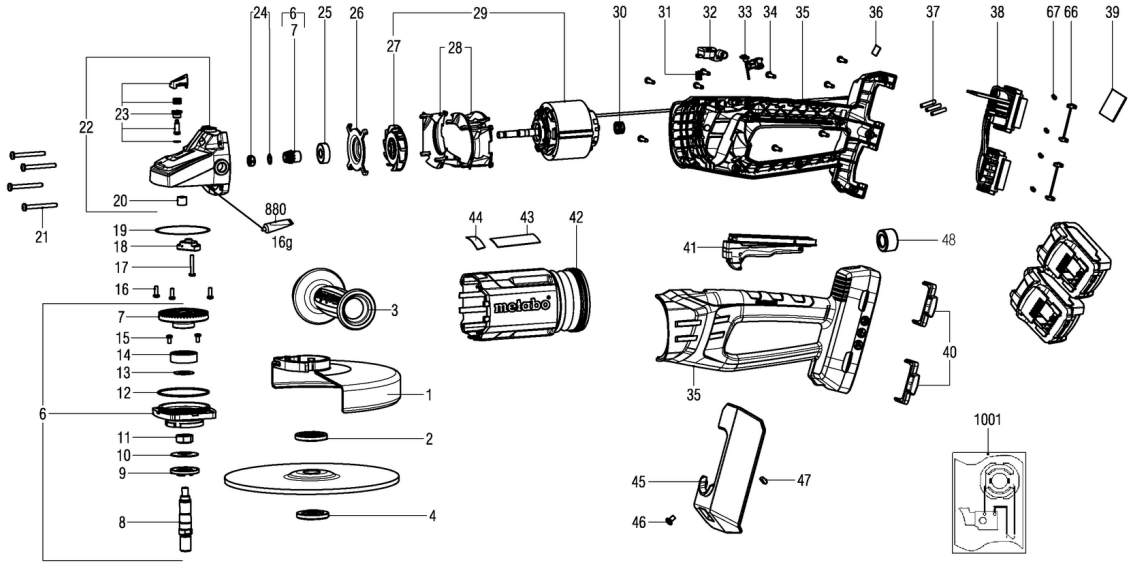
24
6
7
25
26
29
27
28
30
31
32
33
34
35
36
37
38
67
66
39
22
23
20
880
16g
21
19
18
17
16
7
15
14
13
12
6
11
10
9
8
3
1
2
4
44
43
42
41
48
40
35
45
46
47
1001

Številka	Znesek	Številka za naročanje	Opis	PG
1	1	316076800	Wheel guard compl. D230	31
2	1	341031160	Clamping flange	22
3	1	314001470	Anti-vibration handle,M 14	30
4	1	316027620	QUICK NUT	30
6	1	316073030	Flange compl.	36
7	1	316073040	Bevel gear and pinion	31
8	1	341163200	Spindle M14	19
9	1	341039120	Clamping flange	17
10	1	141156890	Circlip	11
11	1	341072600	Clamping wedge	12
12	1	143195400	O-ring	11
13	1	141153220	Washer	11
14	1	143115190	Ball bearing,15X 35X 11	19
15	2	141119570	Fill. head screw(DIN 7985)	11
16	3	141119860	Fillister head screw	12
17	1	141124100	Fillister head screw	11
18	1	341212240	Stop ring	20
19	1	339060320	Compensating Washer	12
20	1	143116090	Needle sleeve	11
21	4	141120560	Self-tap. fill. h. screw	11
22	1	316073160	Gear housing compl.	30
23	1	316073070	Spindle stop compl.	20
24	1	316073050	Fixing set	20
25	1	143116220	Ball bearing, 9x26x8	14
26	1	339130880	Bearing cover	14
27	1	330002290	Fan cpl.	24
28	2	343438540	Baffle	17
29	1	316073060	Motor compl.,36 V	57
30	1	343438590	Cover	14
31	1	342004070	Pressure spring	11
32	1	343438570	Locking catch	17
33	1	316069370	Strand set w.switch + LED	26
34	9	141116020	Self-tap fill h screw	12
35	1	343454540	Handle 2 part	29
36	1	338129960	Indication label, CAS	12
37	3	341213440	Shrink hose	11
38	1	343089020	Electronic unit WPB36-18LTX	51
39	1	338077630	Rating plate 13103000 WPB 36-18 LTX B	11
40	2	343447510	Locking slide	11
41	1	343412690	Switch mechanical	30
42	1	315013780	Motor housing	23
43	1	338134430	Type label, 13103XXX WPB 36-18 LTX BL 24	13
44	1	338127740	Indication label Fast Brake	14
45	1	315420830	Spark protection	23
46	1	141110580	Fillister head screw	11
47	1	141130660	Square nut	11
48	1	143160210	Toroidal ferrite	12
66	2	316066720	Latch compl.	14
67	4	342004180	Pressure spring	11
880	1	344130910	Grease 100G	24
1001	1	338506830	Wiring diagram	