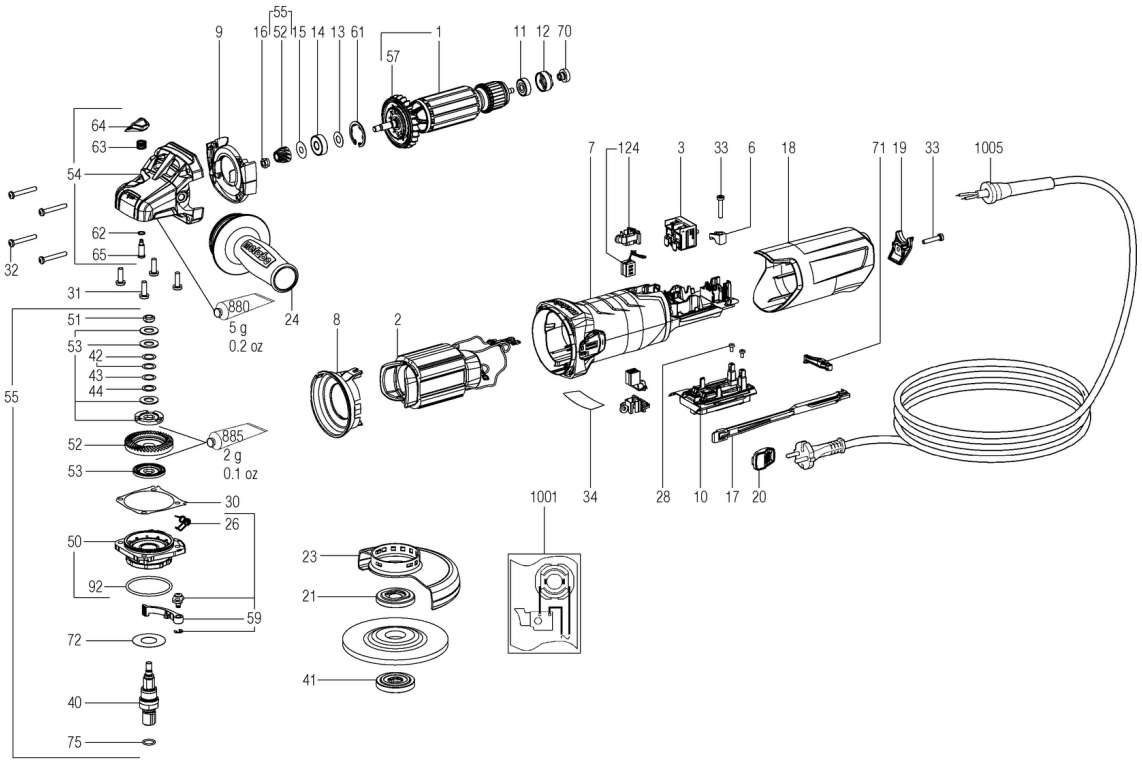
55
9
16
52
15
14
13
61
1
57
11
12
70
64
63
54
62
65
32
31
51
53
42
43
44
55
52
53
30
26
50
92
59
72
40
75
880
5 g
0.2 oz
24
8
2
885
2 g
0.1 oz
23
21
41
1001
7
124
3
33
6
18
71
19
33
1005
34
28
10
17
20

Številka	Znesek	Številka za naročanje	Opis	PG
1	1	310013710	Armature compl. 230V	35
2	1	311012980	Field coil assembly 230V	31
3	1	343410120	Switch 2-pole	21
6	1	343362490	Cable clip	12
7	1	315013520	Motor housing 2 part	21
8	1	339151180	Baffle	11
9	1	339151200	Baffle	11
10	1	343085850	Electronic unit,230V 50/60Hz	32
11	1	143115690	Ball bearing,6x19x6	13
12	1	344097870	Rubber bushing	11
13	1	339133060	Washer,8,05x17x0,4	11
14	1	143115700	Ball bearing,8x22x7	14
15	1	339006390	Washer,7,05x19,5x0,2	11
16	1	341100940	Hexagon nut w.recess	12
17	1	343433070	Switch rod	11
18	1	343433030	Cap	15
19	1	343433100	End cap	11
20	1	343437100	Switch slide	11
21	1	341031160	Clamping flange	22
23	1	339204500	Wheel guard,D125	20
24	1	314000970	Anti-vibration handle,M 8	24
26	1	342022490	Spring clip	11
28	2	141121430	Fill. head screw(DIN 7985)	11
30	1	339012430	Gasket	11
31	4	141121640	Fill. head screw(DIN 7985)	11
32	4	141116980	Self-tap. fill. h. screw	11
33	2	141117060	Self-tap. fill. h. screw	12
34	1	338079000	Rating plate	12
40	1	341604420	Spindle M14	23
41	1	316055350	Clamping nut compl.,M14	22
42	2	141151120	Washer 10,2 X 14,8X 0,2	11
43	1	141152300	Washer 10,2 X 14,8X 0,1	12
44	1	141153920	Washer 10,2 X 14,8X 0,5	11
46	1	630709000	Dust protection filter W12-1 to WE 17-1-	
50	1	343433280	Flange compl.	20
51	1	341102460	Nut	13
52	1	316054980	Bevel gear w.pinion	25
53	1	316055080	Friction washer set compl.	23
54	1	316055100	Gear housing compl.	33
55	1	316054260	Safety clutch w.pinion	37
57	1	316054850	Fan w. dust guard	15
59	1	316066040	Clamping lever compl.	22
61	1	141156650	Retaining ring	11
63	1	342003390	Pressure spring	11
64	1	343433130	Push button	11
65	1	316083490	bolt compl.	16
70	1	343433060	Tacho disc	13
71	1	343433090	Pivoting switch	11
72	1	339007800	Washer	11
75	1	143192490	O-ring	12
92	1	143195640	O-ring	11
124	1	316074980	Carbon brush w. brushholder Set 230 V	29

Številka	Znesek	Številka za naročanje	Opis	PG
880	1	344130920	Grease 100G	31
885	1	344130560	Grease SF 011 50Gr 1,8oz	33
1001	1	338505780	Diagram	
1005	1	316067320	Cable with sleeve	27