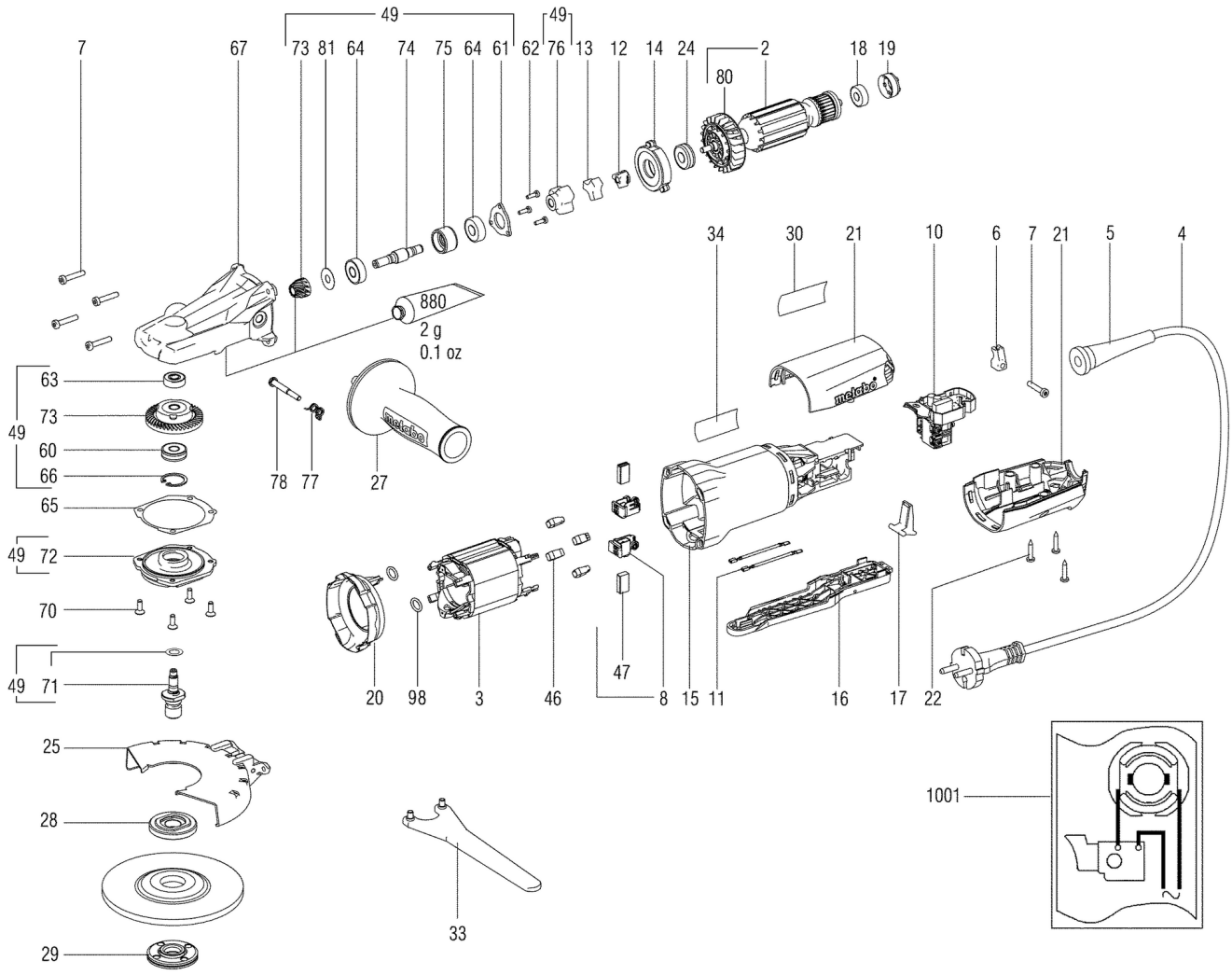
7
67
49
73 81 64
74
75 64 61
49
62 76
13
12
14
24
2
80
18 19
880
2 g
0.1 oz
63
73
49
60
66
65
49 72
70
49 71
78 77
27
34
30
21
10
6
7
21
5
4
20
98
3
46
47
8
15
11
16
17
22
25
28
29
33
1001

Številka	Znesek	Številka za naročanje	Opis	PG
2	1	310011180	Armature compl., 230V	36
3	1	311012090	Field coil w.adapt.,230 V	31
4	1	344493180	Cable with CEE plug	27
5	1	344100970	Cable sleeve	12
6	1	343362490	Cable clip	12
7	5	141117060	Self-tap. fill. h. screw	12
8	2	316046890	Brush holder compl. cut out	22
10	1	316051290	Switch with elektronic,230 V / 50-60 Hz	32
11	2	344498880	Strand compl.	11
12	1	341071110	Carrier	24
13	1	344099140	Buffer	13
14	1	315202620	Bearing flange	25
15	1	315013660	Motor housing	22
16	1	316053640	Shift lever compl.	17
17	1	343437890	Pivoting switch	11
18	1	143115690	Ball bearing,6x19x6	13
19	1	344097870	Rubber bushing	11
20	1	343436590	Baffle	13
21	1	343433790	Motor cap 2-part	18
22	3	141113180	Self-tap. fill. h. screw	11
24	1	143115560	Ball bearing,8x22x7	18
25	1	316055590	Wheel guard compl.	30
27	1	316046590	Side support handle compl.	20
28	1	341031160	Clamping flange	22
29	1	316064680	Quicknut,M14	22
30	1	338062480	Rating plate	11
33	1	399999990	Part not needed	
34	1	399999990	Part not needed	
46	4	344099590	Shrink hose	11
47	1	316046900	Carbon brush set cut-off	22
49	1	316066030	Flange compl.	37
60	1	143115560	Ball bearing,8x22x7	18
61	1	315418240	Bearing cover	12
62	3	141124260	Fillister head screw	11
63	1	143114790	RI.KU.LA. 6X 19X 6	15
64	2	143115700	Ball bearing,8x22x7	14
65	2	339012160	Compensating washer	11
66	1	141156860	Retaining ring	11
67	1	316055700	Gear housing compl.	32
70	4	141120200	Countersunk screw	11
71	1	316069020	spindle compl. M14	25
72	1	315202970	Flange	20
73	1	316055730	Bevel gear and bevel gear	22
74	1	341604480	Drive shaft	17
75	1	341006140	Spacer bush	17
76	1	341071350	Carrier	19
77	1	342022040	Spring clip	11
78	1	341701490	Tight-fit screw	11
80	1	330002060	Fan	14
81	1	339006390	Washer,7,05x19,5x0,2	11
98	2	143195530	O-ring	11
880	1	344130920	Grease 100G	31

Številka	Znesek	Številka za naročanje	Opis	PG
1001	1	338505710	Wiring diagram	