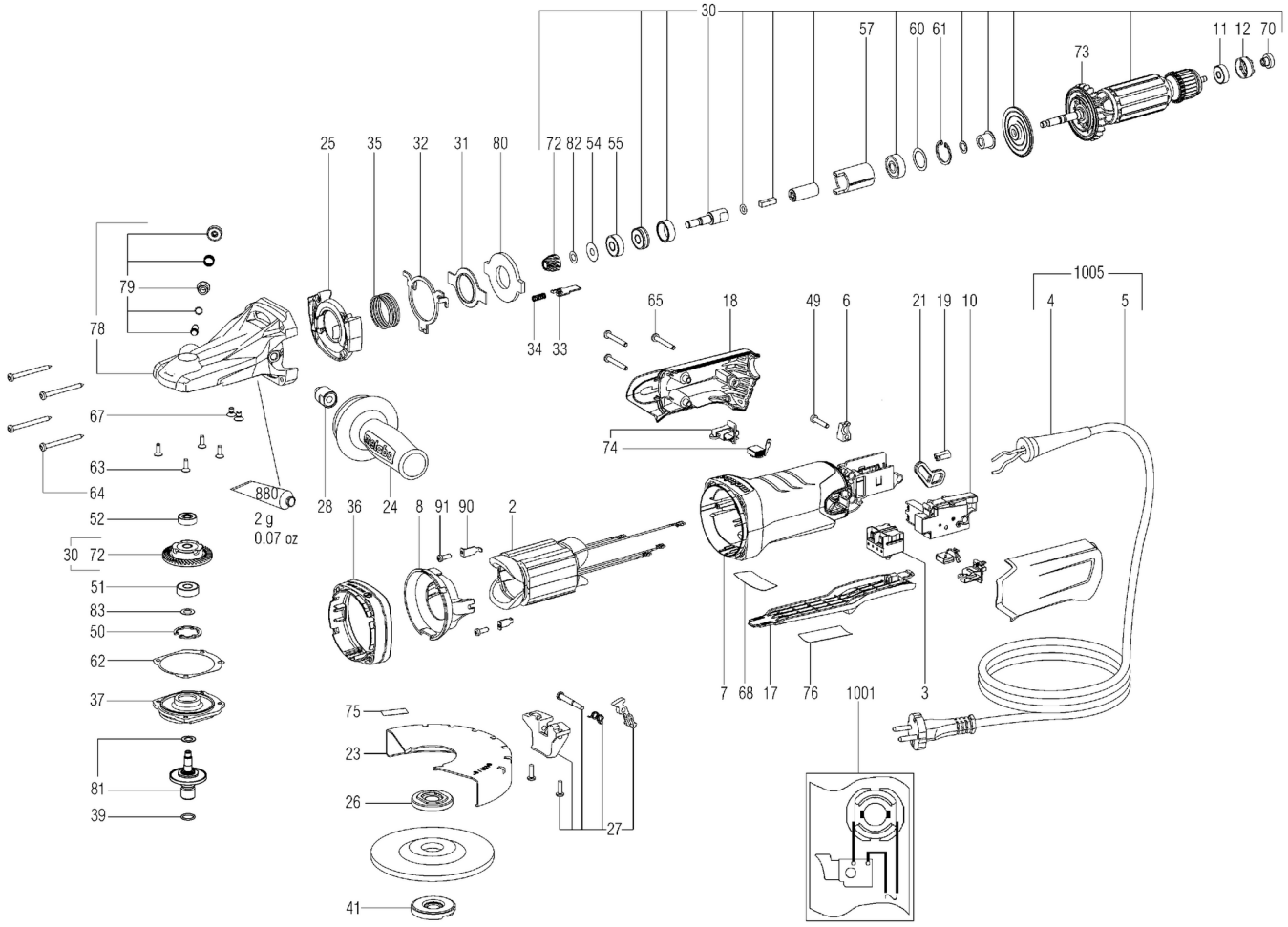
30
57
60 61
11 12 70
73
25 35 32 31 80 72 82 54 55
79
78
65 18
49 6
21 19 10
1005
4 5
67
74
63
64
880
2 g
0.07 oz
28 36 24 8 91 90 2
52
30 72
51
83
50
62
37
81
39
7 68 17 76 1001 3
75
23
26
27
41

Številka	Znesek	Številka za naročanje	Opis	PG
1	1	399999990	Part not needed	
2	1	311012180	Field coil w.field coil,230 V	33
3	1	343410280	Switch 2-pole	20
4	1	399999990	Part not needed	
5	1	399999990	Part not needed	
6	1	343362490	Cable clip	12
7	1	315013710	Motor housing	21
8	1	339151210	Baffle	11
10	1	343084780	Electronic unit,230V / 50/60Hz	33
11	1	143115690	Ball bearing,6x19x6	13
12	1	344097870	Rubber bushing	11
17	1	343455140	Shift lever	14
18	1	316070220	Motor cap 2 parts, black	22
19	1	343435170	Light guide	11
23	1	339204600	Wheel guard,D 150	33
24	1	314000970	Anti-vibration handle,M 8	24
25	1	339151200	Baffle	11
26	1	341031160	Clamping flange	22
27	1	316083170	Retainer compl.,D150	31
29	1	341013450	brake disc,WEBF	27
30	1	316067000	Intermediate shaft set	52
31	1	343433710	Supporting plate	11
32	1	339136010	Shift lever	12
33	1	343433700	Shift element	11
34	1	342003420	Pressure spring	11
35	1	342003930	Pressure spring	11
36	1	343435920	Intermediate flange	17
37	1	315203030	Flange	20
39	1	143192490	O-ring	12
41	1	316064680	Quicknut,M14	22
49	1	141117060	Self-tap. fill. h. screw	12
50	1	141156650	Retaining ring	11
51	1	143115560	Ball bearing,8x22x7	18
52	1	143114790	RI.KU.LA. 6X 19X 6	15
54	1	339006390	Washer,7,05x19,5x0,2	11
55	1	143114740	Ball bearing, 8x22x7	22
57	1	341071640	Spacer sleeve	19
60	1	143115490	Compensating washer	11
61	1	141181010	Retaining ring	11
62	2	339012160	Compensating washer	11
63	4	141120200	Countersunk screw	11
64	4	341701470	Self-tap. fill. h. screw	11
65	3	141116980	Self-tap. fill. h. screw	11
67	2	141121710	Countersunk screw	11
68	1	338064580	Rating plate	11
70	1	343433060	Tacho disc	13
72	1	316062410	Bevel gear and bevel gear,1:3,9	31
73	1	316054850	Fan w. dust guard	15
74	1	316067170	carbonbrush with brusholder Set 230V	27
75	1	399999990	Part not needed	
76	1	399999990	Part not needed	
78	1	316062330	Gear housing compl.	36

Številka	Znesek	Številka za naročanje	Opis	PG
79	1	316062340	Spindle lock compl.	24
80	1	339011590	Butting plate	19
81	1	316069040	spindle compl. WBF M14	31
82	1	339006810	Washer	11
87	1	141156000	Washer	11
90	2	399999990	Part not needed	
91	2	399999990	Part not needed	
880	1	344130920	Grease 100G	31
1001	1	338505950	Diagram	
1005	1	316067340	Cable with sleeve	27