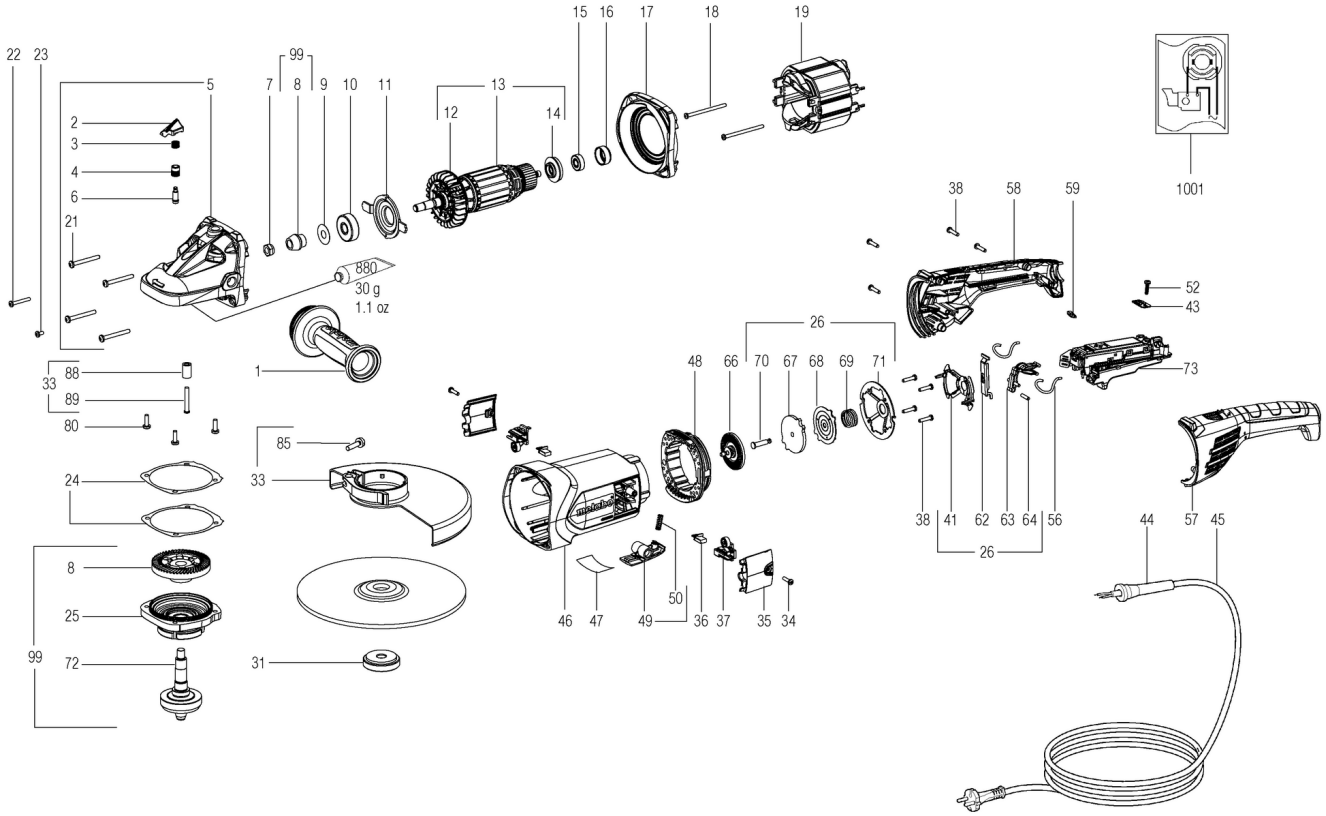
22
23
5
99
7
8
9
10
11
13
12
14
15
16
17
18
19
1001
2
3
4
6
21
880
30 g
1.1 oz
38
58
59
52
43
26
1
48
66
70
67
68
69
71
73
88
33
89
80
85
24
33
38
41
62
63
64
56
44
57
45
26
8
25
99
72
31
46
47
49
50
36
37
35
34

Številka	Znesek	Številka za naročanje	Opis	PG
1	1	314000960	Anti-vibration handle,M 14	28
2	1	343399790	Push button black	11
3	1	342003390	Pressure spring	11
4	1	341005830	Guide bush	15
5	1	316045500	Gear housing cpl.	36
6	1	341515430	Bolt	11
7	1	341100660	Self locking nut	14
8	1	316045530	Bevel gear	34
9	1	141123870	Washer	11
10	1	143115510	Ball bearing, 12x37x12	16
11	1	339007280	Fixed bearing cover	14
12	1	316045560	Fan w. dust guard	21
13	1	310012670	Armature compl.,230 V	46
14	1	343390630	Sealing washer	11
15	1	143114980	Ball bearing, 8x22x7	22
16	1	344102590	Rubber bushing	12
17	1	343395540	Intermediate flange	15
18	2	141118970	Self-tap. fill. h. screw	11
19	1	311009580	Field coil	35
21	4	141118810	Self-tap. fill. h. screw	11
22	1	141122020	Fillister head screw	11
23	1	141119850	Fillister head screw	11
24	3	339011810	Gasket	11
25	1	316045550	Gear flange cpl.	33
26	1	316067430	Maintenance kit Brake	33
31	1	316027620	QUICK NUT	30
33	1	316053510	Wheel guard compl.	35
34	2	341702050	Screw	11
35	2	343395530	Brush holder cover	11
36	1	316045570	Carbon brush set,230 V	24
37	2	343000950	Brush guide	19
38	8	141116020	Self-tap fill h screw	12
41	2	343446240	Cable sleeve	13
43	1	339127730	Cable clip	11
44	1	344094550	Cable sleeve	13
45	1	344487800	Cable with plug	25
46	1	315013890	Motor housing	29
47	1	338070080	Rating plate	12
48	1	343397490	Damper	20
49	1	343397700	Locking lever	12
50	1	342002170	Pressure spring	11
52	1	141116800	Self-tap. fill. h. screw	11
56	2	344531350	Strand	14
57	1	343446210	Handle Bottom	20
58	1	343446220	Handle Top	20
59	1	343397500	Light transmission	11
62	1	339137720	Holder	13
63	1	343447060	Guider	13
64	1	341513850	Cylindrical pin	11
66	1	341212460	brake disc	27
67	1	339137730	brake pad	17
68	1	343446250	Backing plate	15

Številka	Znesek	Številka za naročanje	Opis	PG
69	1	342004150	Pressure spring	11
70	1	341212470	Feed rod	14
71	1	339137740	Retaining sheet	16
72	1	316066460	Spindle compl.,WBA M14	39
73	1	316067410	Electronic switch compl.,230 V	41
80	3	141121640	Fill. head screw(DIN 7985)	11
85	1	141111340	Cap screw	11
88	1	341006090	Spacer bush	11
89	1	141124190	Fillister head screw	11
99	1	316067230	Gear flange cpl.	48
880	1	344130910	Grease 100G	24
1001	1	338505670	Verdrahtungsplan	