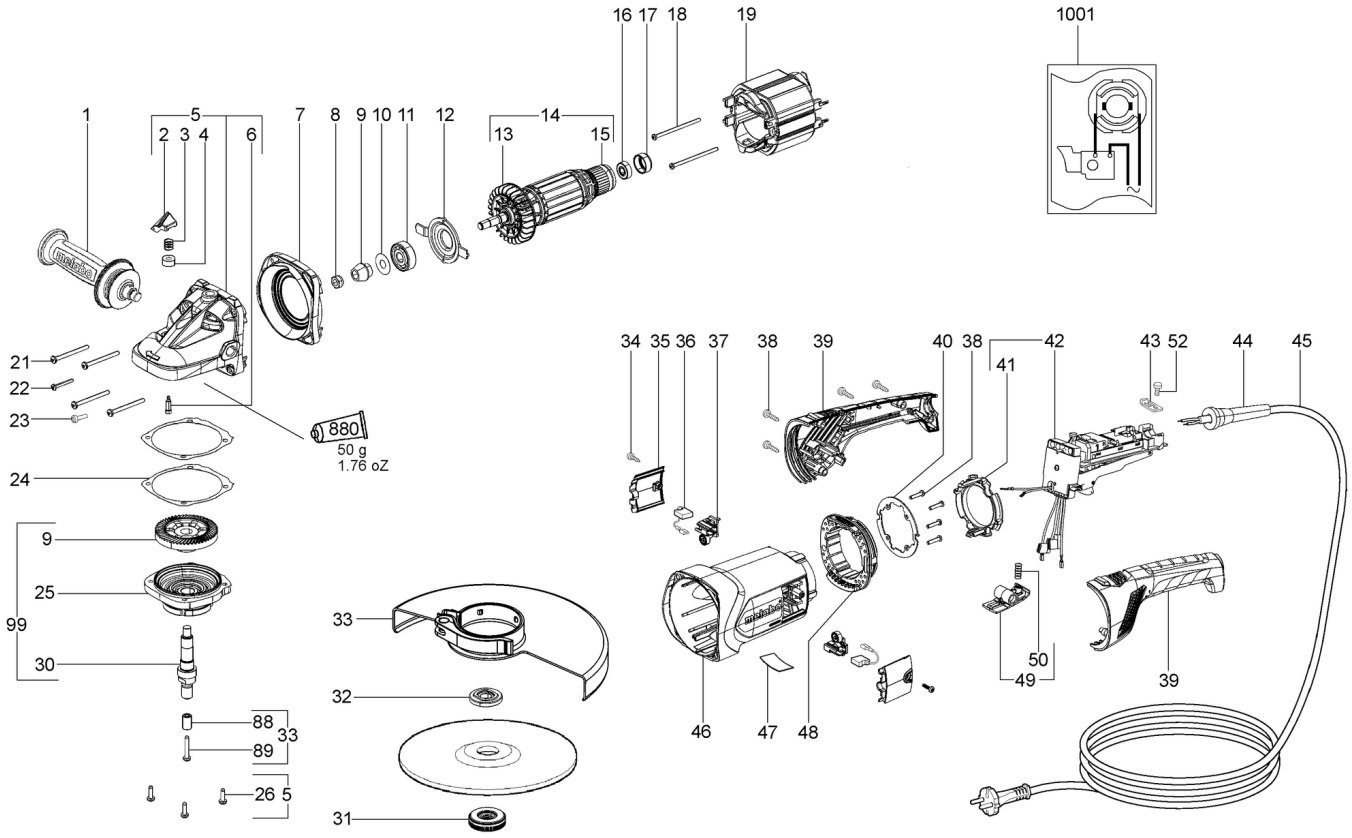
1
2 3 4
5
6
7
8
9 10 11
12
13
14
15
16 17 18
19
1001
21
22
23
24
9
25
99
30
880
50 g
1.76 oZ
33
88
89
26 5
31
32
34 35 36 37
38
39
40 38
41
42
43 52
44
45
46
47
48
49
50
39

Številka	Znesek	Številka za naročanje	Opis	PG
1	1	314000960	Anti-vibration handle,M 14	28
2	1	343399790	Push button black	11
3	1	342003390	Pressure spring	11
4	1	341005830	Guide bush	15
5	1	316045500	Gear housing cpl.	36
6	1	341515430	Bolt	11
7	1	343395540	Intermediate flange	15
8	1	341100660	Self locking nut	14
9	1	316045530	Bevel gear	34
10	1	141123870	Washer	11
11	1	143115510	Ball bearing, 12x37x12	16
12	1	339007280	Fixed bearing cover	14
13	1	316045560	Fan w. dust guard	21
14	1	310011350	Armature compl.,230 V	46
15	1	343390630	Sealing washer	11
16	1	143115800	Ball bearing, 8x22x7	13
17	1	344102590	Rubber bushing	12
18	2	141118970	Self-tap. fill. h. screw	11
19	1	311009580	Field coil	35
21	4	141118810	Self-tap. fill. h. screw	11
22	1	141122020	Fillister head screw	11
23	1	141119850	Fillister head screw	11
24	3	339011810	Gasket	11
25	1	316045550	Gear flange cpl.	33
26	3	141121640	Fill. head screw(DIN 7985)	11
30	1	341602980	Spindle shaft	29
31	1	316027620	QUICK NUT	30
32	1	341031160	Clamping flange	22
33	1	316053510	Wheel guard compl.	35
34	2	341702050	Screw	11
35	2	343395530	Brush holder cover	11
36	1	316045570	Carbon brush set,230 V	24
37	2	343000950	Brush guide	19
38	8	141116020	Self-tap fill h screw	12
39	1	343399760	Handle upper+lower part	20
40	1	339007320	Retaining sheet	12
41	1	343399800	Edge protection	11
42	1	316052180	Electronic switch set,Defond 230V	37
43	1	339127730	Cable clip	11
44	1	344094550	Cable sleeve	13
45	1	344487800	Cable with plug	25
46	1	315013300	Motor housing	25
47	1	338063470	Rating plate	11
48	1	343397490	Damper	20
49	1	343397700	Locking lever	12
50	1	342002170	Pressure spring	11
52	1	141116800	Self-tap. fill. h. screw	11
88	1	341006090	Spacer bush	11
89	1	141124190	Fillister head screw	11
99	1	316064090	Gear flange cpl.	42
880	1	344130910	Grease 100G	24
1001	1	338505670	Verdrahtungsplan	