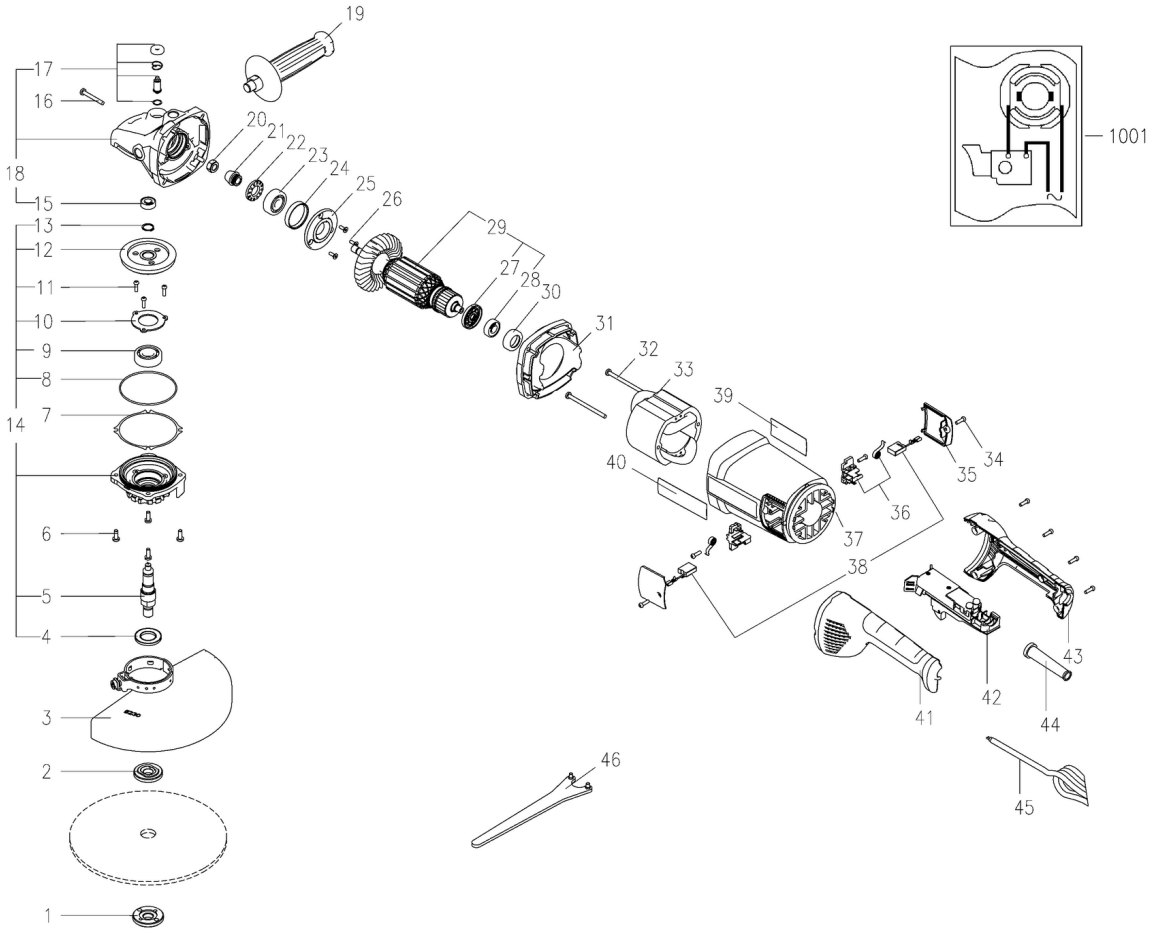
19
17
16
18
20
21
22
23
24
25
26
29
27
28
30
31
32
33
39
40
15
13
12
11
10
9
8
14
7
6
5
4
3
2
1
37
38
34
35
36
41
42
43
44
45
46
1001

Številka	Znesek	Številka za naročanje	Opis	PG
1	1	341106900	Flange nut	20
2	1	341031160	Clamping flange	22
3	1	339205340	wheel guard, complete D230	26
4	1	343451030	Dust cover	11
5	1	341605810	Spindle	15
6	4	341723700	Inside six corner pan head screw	11
7	1	339013300	WASHER	11
8	1	344114670	O-ring	11
9	1	320054650	Ball bearing	16
10	1	339149440	Bearing cover	11
11	3	341723710	Inside six corner tapping screw	11
12	1	340037650	Bevel gear	25
13	1	342024600	Spacer	11
14	1	316098890	Gear box cover assy.	32
15	1	320054660	Ball bearing	13
16	4	341723720	Inside six corner tapping screw	11
17	1	339149450	Spindle lock	13
18	1	315107840	Gear box component	28
19	1	314000280	Handle cpl.	25
20	1	141130130	Hexagonal nut	12
21	1	340037660	Pinion	18
22	1	344114650	Sealing ring	11
23	1	320054670	Ball bearing	17
24	1	344114660	Bearing rubber ring	11
25	1	339149460	Bearing cover	12
26	3	341723730	Inside six corner countersunk head screw	11
27	1	343451070	Dustproof ring	11
28	1	320054680	Ball bearing	16
29	1	310013170	Armature compl.	40
30	1	344071190	Bearing bush	12
31	1	339153600	Baffle	14
32	2	341723750	Pan head screw	11
33	1	311013270	Stator assy.	34
34	8	341723740	Inside six corner tapping screw	11
35	2	343451080	Locking cover	11
36	2	343003160	Brush holder	14
37	1	343451090	Motor housing	22
38	1	343013580	Carbon Brush	21
39	1	338072970	Rating plate	13
41	1	343451730	Handle cover left	15
42	1	343413640	switch	36
43	1	343451660	Handle cover right	16
44	1	344114680	Cord sleeve	11
45	1	344532520	Cable	25
46	1	344160840	Pin spanner	17
880	1	344130910	Grease 100G	24
1001	1	338510550	Wiring diagram	