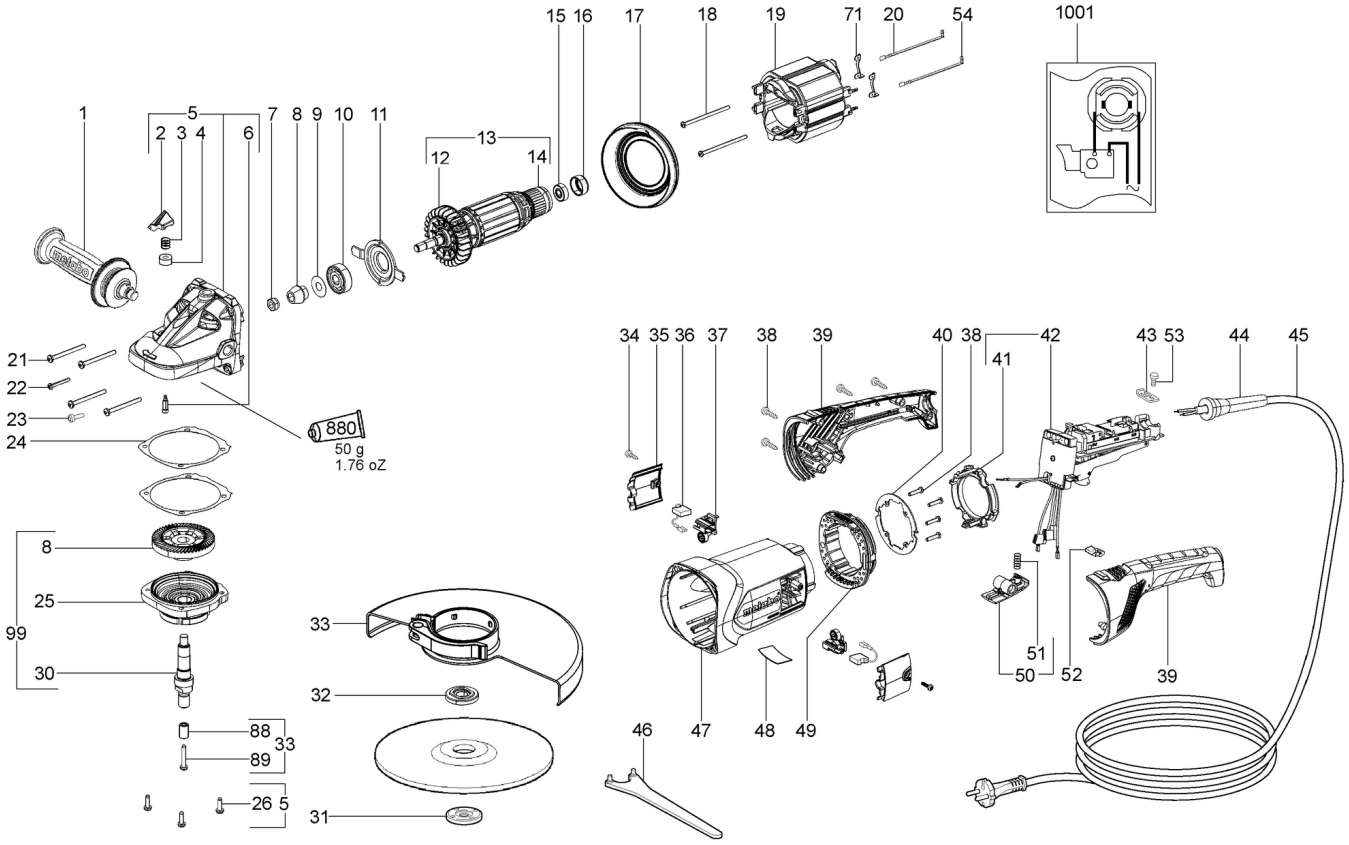
1
5
2 3 4
6
7 8 9 10 11
13
12
14
15 16
17
18
19
71
20
54
1001
21
22
23
24
880
50 g
1.76 oZ
8
25
99
30
88
89
33
26 5
31
33
32
34 35 36 37
38
39
40 38
41
42
43 53
44
45
51
50
52
39
46
47
48
49

Številka	Znesek	Številka za naročanje	Opis	PG
1	1	314000960	Anti-vibration handle,M 14	28
2	1	343399790	Push button black	11
3	1	342003390	Pressure spring	11
4	1	341005830	Guide bush	15
5	1	316045500	Gear housing cpl.	36
6	1	341515430	Bolt	11
7	1	341100660	Self locking nut	14
8	1	316045530	Bevel gear	34
9	1	141123870	Washer	11
10	1	143115510	Ball bearing, 12x37x12	16
11	1	339007280	Fixed bearing cover	14
12	1	316045560	Fan w. dust guard	21
13	1	310011330	Armature compl.,230 V	45
14	1	343390630	Sealing washer	11
15	1	143115800	Ball bearing, 8x22x7	13
16	1	344102590	Rubber bushing	12
17	1	339151130	Baffle	11
18	2	141121680	Self-tap. fill. h. screw	11
19	1	311009590	Field coil	35
20	1	399999990	Part not needed	
21	4	141119370	Self-tap. fill. h. screw	11
22	1	141122020	Fillister head screw	11
23	1	141119850	Fillister head screw	11
24	3	339011810	Gasket	11
25	1	316045550	Gear flange cpl.	33
26	3	141121640	Fill. head screw(DIN 7985)	11
30	1	341602980	Spindle shaft	29
31	1	341106900	Flange nut	20
32	1	341031160	Clamping flange	22
33	1	316053510	Wheel guard compl.	35
34	2	341702050	Screw	11
35	2	343395530	Brush holder cover	11
36	1	316045570	Carbon brush set,230 V	24
37	2	343000950	Brush guide	19
38	8	141116020	Self-tap fill h screw	12
39	1	343399760	Handle upper+lower part	20
40	1	339007320	Retaining sheet	12
41	1	343399800	Edge protection	11
42	1	316052180	Electronic switch set,Defond 230V	37
43	1	339127730	Cable clip	11
44	1	344094550	Cable sleeve	13
45	1	344487800	Cable with plug	25
46	1	344160840	Pin spanner	17
47	1	315013300	Motor housing	25
48	1	338063370	Rating plate	11
49	1	343397490	Damper	20
50	1	343397700	Locking lever	12
51	1	342002170	Pressure spring	11
52	1	399999990	Part not needed	
53	1	141116800	Self-tap. fill. h. screw	11
54	1	399999990	Part not needed	
60	1	399999990	Part not needed	

Številka	Znesek	Številka za naročanje	Opis	PG
71	2	399999990	Part not needed	
88	1	341006090	Spacer bush	11
89	1	141124190	Fillister head screw	11
99	1	316064090	Gear flange cpl.	42
880	1	344130910	Grease 100G	24
1001	1	338505670	Verdrahtungsplan	