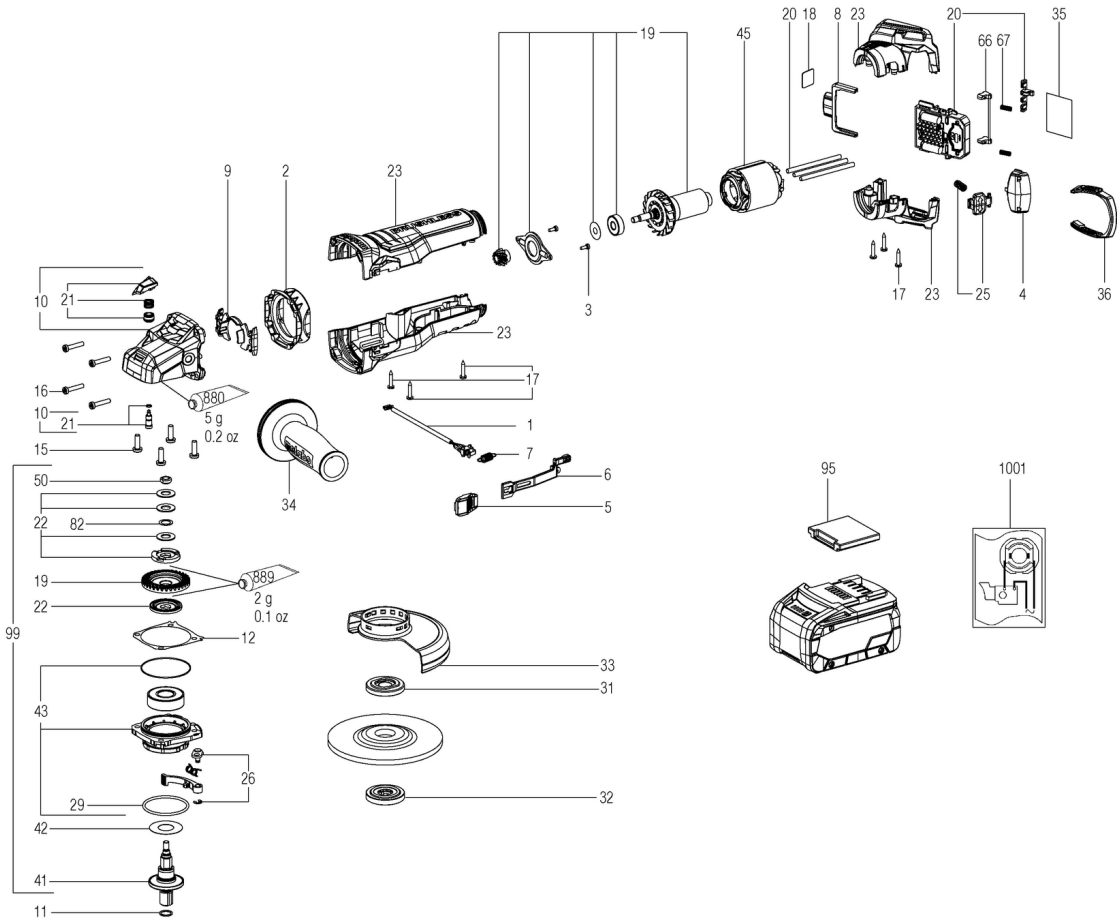
19
45
20 18 8 23
20
35
66 67
9
2
23
3
17 23 25 4 36
10 21
23
17
16
880
5 g
0.2 oz
10
21
1
15
7
6
50
34
5
22 82
95
1001
19
889
2 g
0.1 oz
22
99
12
33
31
43
26
29
32
42
41
11

Številka	Znesek	Številka za naročanje	Opis	PG
1	1	316069700	Strand set w.switch	23
2	1	339151380	baffle	11
3	2	141123990	Fillister head screw	11
4	1	316069710	Cover cap without dial	18
5	1	343454590	Switch slide	19
6	1	343453060	Switch rod	11
7	1	342004340	Tension spring	11
8	1	343447510	Locking slide	11
9	1	343452960	Cover plate	11
10	1	316070200	Gear housing compl.	28
11	1	143192490	O-ring	12
12	1	339011970	Gasket	11
15	4	141121640	Fill. head screw(DIN 7985)	11
16	4	141117060	Self-tap. fill. h. screw	12
17	6	141113180	Self-tap. fill. h. screw	11
18	1	338129960	Indication label, CAS	12
19	1	316069770	Armature compl.,	37
20	1	343089290	18V service electronic unit, WB-1100	48
21	1	316072280	Spindle stop compl.	20
22	1	316055080	Friction washer set compl.	23
23	1	316081740	Motor housing complete Sideswitch 18-11	30
25	1	316069840	Spindle lock compl.	17
26	1	316055110	Clamping lever compl.	20
29	1	143195640	O-ring	11
31	1	341031160	Clamping flange	22
32	1	316055350	Clamping nut compl.,M14	22
33	1	339204500	Wheel guard,D125	20
34	1	316046590	Side support handle compl.	20
35	1	338077250	Rating plate	12
36	1	343453150	Filter compl.	19
41	1	316071330	Spindle	28
42	1	339007800	Washer	11
43	1	343433280	Flange compl.	20
45	1	311013380	Stator compl. W18-11 BL	33
50	1	341102460	Nut	13
66	1	316066720	Latch compl.	14
67	2	342004180	Pressure spring	11
82	1	141153920	Washer 10,2 X 14,8X 0,5	11
95	2	343439680	Cover cap	11
99	1	316084610	Safety clutch with pinion	34
880	1	344130920	Grease 100G	31
889	1	344130560	Grease SF 011 50Gr 1,8oz	33
1001	1	338506710	Verdrahtungsplan 18 V	