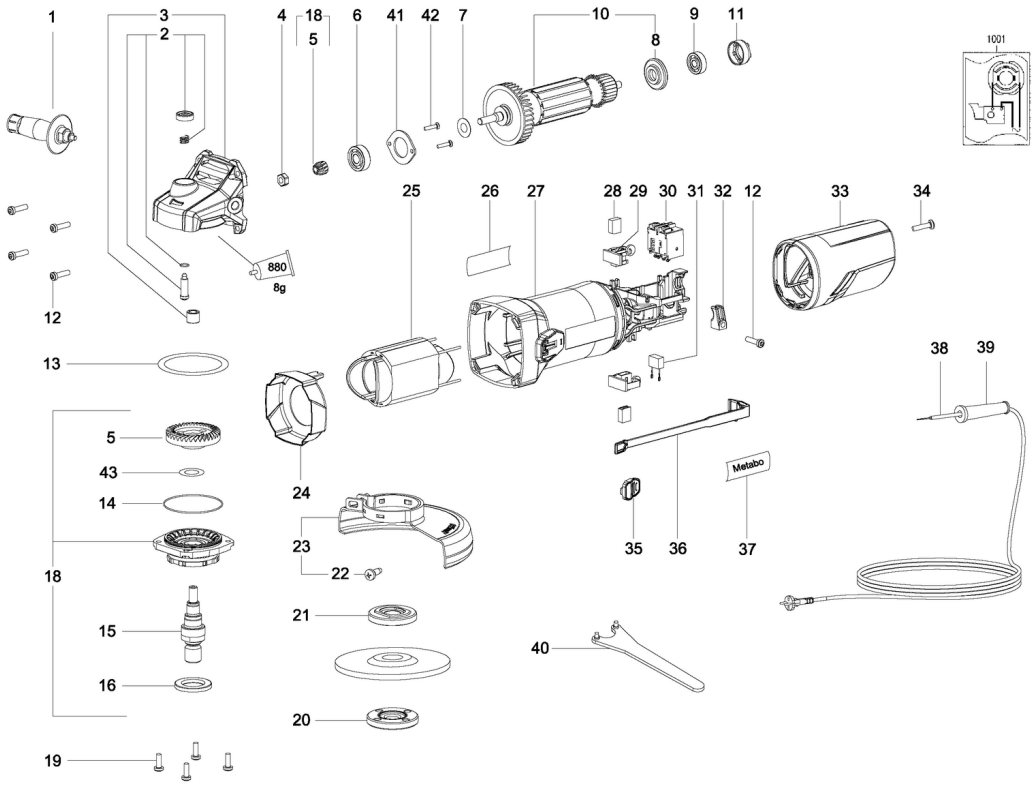
1
3
2
4
18
5
6
41
42
7
10
8
9
11
1001
880
8g
12
25
26
27
28
29
30
31
32
12
33
34
13
38
39
5
43
14
24
Metabo
18
23
22
35
36
37
15
21
40
16
20
19

Številka	Znesek	Številka za naročanje	Opis	PG
1	1	314000540	Handle cpl.	22
2	1	316040610	Spindle stop compl.	14
3	1	316098360	Gear housing compl.	25
4	1	141130100	Hexagonal nut	11
5	1	316098350	Bevel gear and pinion	20
6	1	143116270	Ball bearing, 8x22x 7	15
7	1	339007940	Washer	11
8	1	343392740	Sealing washer	16
9	1	143115870	Ball bearing, 6x19x6	15
10	1	310013010	Armature compl.,230V	29
11	1	344095260	Rubber bushing	12
12	5	141116020	Self-tap fill h screw	12
13	1	339060160	Compensating Washer	12
14	1	344103340	O-ring	11
15	1	341605710	Spindle M14	17
16	1	339007790	Washer	11
17	1	143192540	O-ring	11
18	1	316098320	Flange compl.	27
19	4	141120070	Fill. head screw	11
20	1	341106900	Flange nut	20
21	1	341031160	Clamping flange	22
22	1	141124060	Fillister head screw	11
23	1	339209650	Wheel guard, D 115	20
24	1	339151280	Baffle	11
25	1	311013090	Field coil,230V	24
26	1	338071720	Rating plate	12
27	1	315013970	Motor housing	18
28	1	316098370	Carbon brush compl.	16
29	1	316098380	Brush holder compl.	19
30	1	343412680	Switch, S125D 230V	21
31	1	343255170	Capacitor	12
32	1	343362490	Cable clip	12
33	1	343449410	Motor cap	16
34	1	141116800	Self-tap. fill. h. screw	11
35	1	343412110	Switch slide, red	11
36	1	343446390	Switch rod	11
37	1	338122540	Metabo plate	11
38	1	344499540	Cable w.CEE plug	23
39	1	343446380	Cable sleeve	11
40	1	344163920	Pin spanner	14
41	1	315420080	Fixed bearing cover	11
42	2	141110460	Fillister head screw	11
43	5	141156520	Washer	11
880	1	344130910	Grease 100G	24
1001	1	338510270	Diagram	