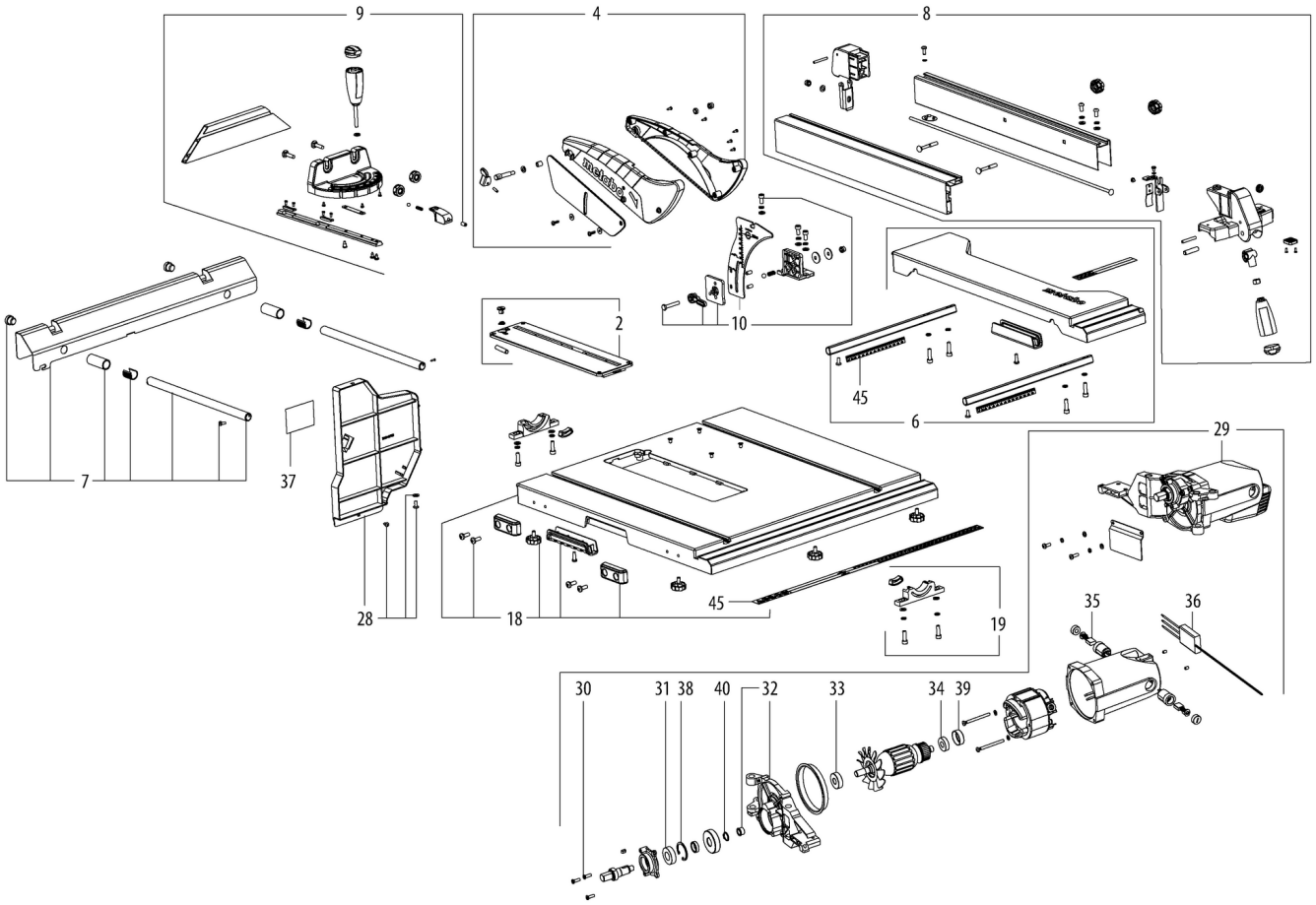
9
4
8
2
10
45
6
7
37
28
18
45
19
29
35
36
30
31
38
40
32
33
34
39

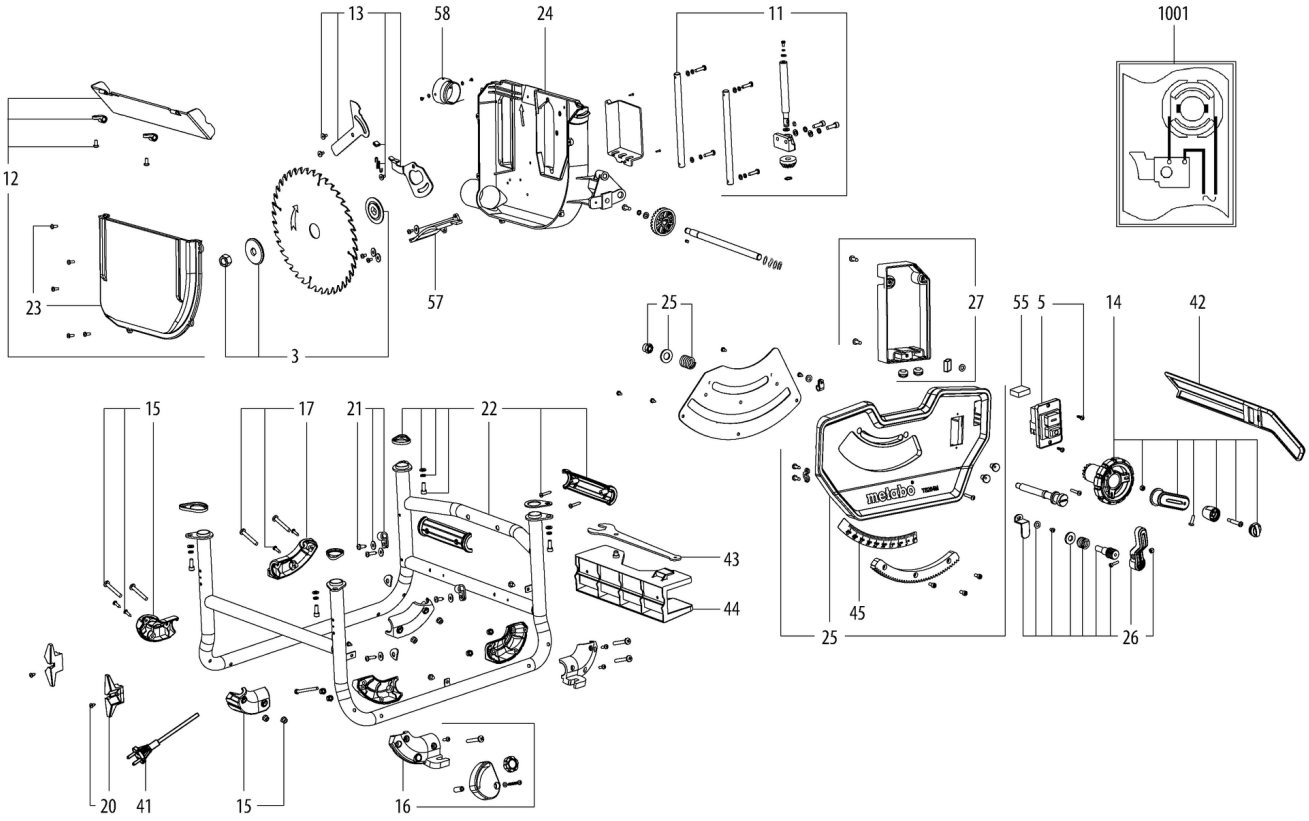
13
58
24
11
1001
12
23
57
3
25
27
55
5
14
42
15
17
21
22
43
44
45
25
26
20
41
15
16

| Številka | Znesek | Številka za naročanje | Opis | PG |
|---|---|---|---|---|
| 1 | 1 | 315417860 | Table insert | 23 |
| 2 | 1 | 316052410 | Table insert compl. | 24 |
| 3 | 1 | 316052420 | BLADE COLLAR | 19 |
| 4 | 1 | 316072200 | Wheel guard compl. | 25 |
| 5 | 1 | 343412470 | Switch cpl. | 13 |
| 6 | 1 | 316071560 | Table side extension compl. | 35 |
| 7 | 1 | 316099840 | rear table compl. | 22 |
| 8 | 1 | 316071860 | Parallel guide compl. | 37 |
| 9 | 1 | 316072210 | Angular guide compl. | 31 |
| 10 | 1 | 316097110 | Riving knife compl. | 28 |
| 11 | 1 | 316071870 | HEIGHT-ADJUSTMENT | 24 |
| 12 | 1 | 343455180 | Saw blade cover lower | 24 |
| 13 | 1 | 316072220 | Spindle stop compl. | 15 |
| 14 | 1 | 316072230 | Handwheel compl. | 25 |
| 15 | 1 | 344114750 | Rubber foot left/reight cpl. | 14 |
| 16 | 1 | 344114760 | Foot left cpl. | 17 |
| 17 | 1 | 344114770 | Foot right cpl. | 14 |
| 18 | 1 | 316099320 | Table compl. | 49 |
| 19 | 1 | 341167300 | saw bracket guidance cpl. | 19 |
| 20 | 1 | 343452620 | Cable Big Holder | 12 |
| 21 | 1 | 343452630 | CABLE CLAMP cpl. | 11 |
| 22 | 1 | 343452640 | frame cpl. | 35 |
| 23 | 1 | 316099330 | Saw blade depot cpl. | 19 |
| 24 | 1 | 315420670 | Saw housing cpl. | 33 |
| 25 | 1 | 344114780 | front housing vollst. | 31 |
| 26 | 1 | 316099340 | Angular guide compl. | 21 |
| 27 | 1 | 316099350 | TERMINAL BOX cpl. | 15 |
| 28 | 1 | 316099360 | rear housing cpl. | 21 |
| 29 | 1 | 316099370 | Motor compl. | 53 |
| 30 | 1 | 141112230 | Countersunk screw | 11 |
| 31 | 1 | 320054720 | Ball bearing | 15 |
| 32 | 1 | 341006750 | Flange compl. | 33 |
| 33 | 1 | 320050750 | Ball bearing | 15 |
| 34 | 1 | 143113860 | Ball bearing, 12x28x8 | 23 |
| 35 | 1 | 343013610 | Carbon Brush | 14 |
| 36 | 1 | 343088140 | soft start compl | 15 |
| 37 | 1 | 338073250 | Rating plate | 12 |
| 38 | 1 | 342024620 | Spacer | 11 |
| 39 | 1 | 344114790 | Rubber bushing | 11 |
| 40 | 1 | 6400009900 | RETAINING RING FOR SHAFTS 16X1 | 11 |
| 41 | 1 | 344532690 | Cable with plug | 23 |
| 42 | 1 | 343433180 | Push stick | 15 |
| 43 | 1 | 341210480 | Key | 13 |
| 44 | 1 | 331054770 | rip fence storage | 19 |
| 45 | 1 | 316075160 | Scale | 19 |
| 55 | 1 | 8050734103 | Condenser | 11 |
| 57 | 1 | 344113800 | CHIP GUIDE | 13 |
| 58 | 1 | 316078380 | Exhaust nozzle compl. | 14 |
| 1001 | 1 | 338510600 | Diagram | |