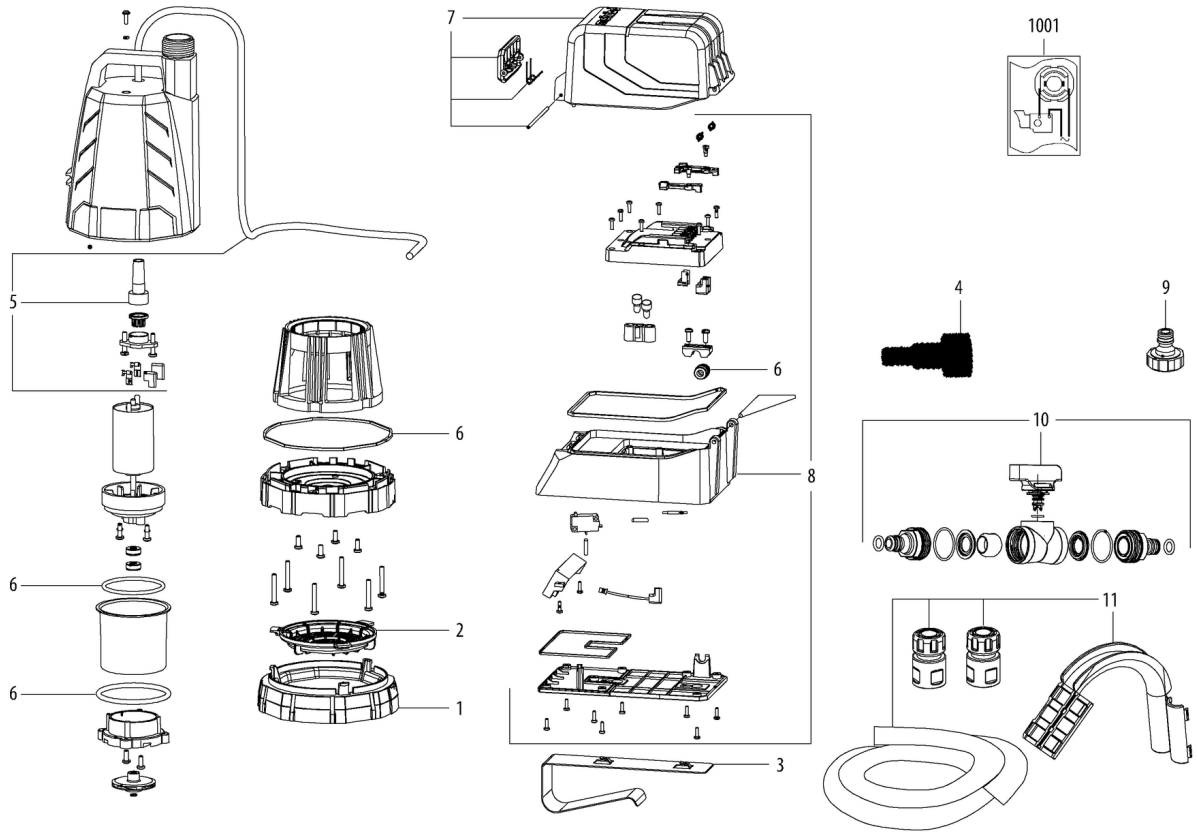
7
1001
5
4
9
6
6
10
8
6
2
11
6
1
3

Številka	Znesek	Številka za naročanje	Opis	PG
1	1	343461350	Base	13
2	1	343461360	Filter	13
3	1	341167670	Fastening hook	20
4	1	343461370	Multi-Adaptor	12
5	1	316079450	Cable compl.	22
6	1	316079460	Sealing set compl.	14
7	1	316079470	Cover cpl.	18
8	1	316079480	battery box cpl.	34
9	1	316079490	nipple connector cpl.	13
10	1	316079500	Control valve compl.	15
11	1	316079510	hose compl.	22
1001	1	338511200	Diagram	