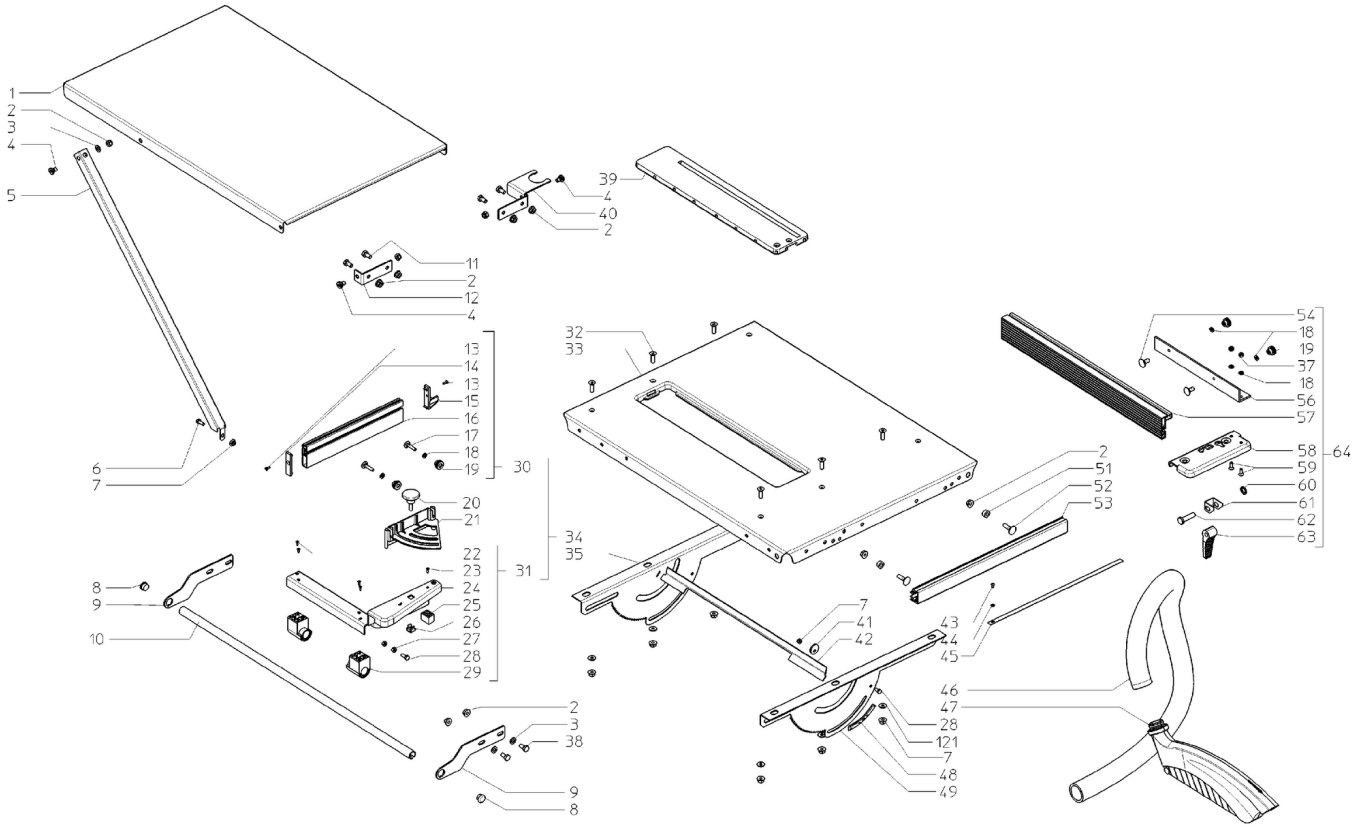
1
2
3
4
5
6
7
8
9
10
11
12
13
14
15
16
17
18
19
20
21
22
23
24
25
26
27
28
29
30
31
32
33
34
35
38
39
40
41
42
43
44
45
46
47
48
49
51
52
53
54
56
57
58
59
60
61
62
63
64
121

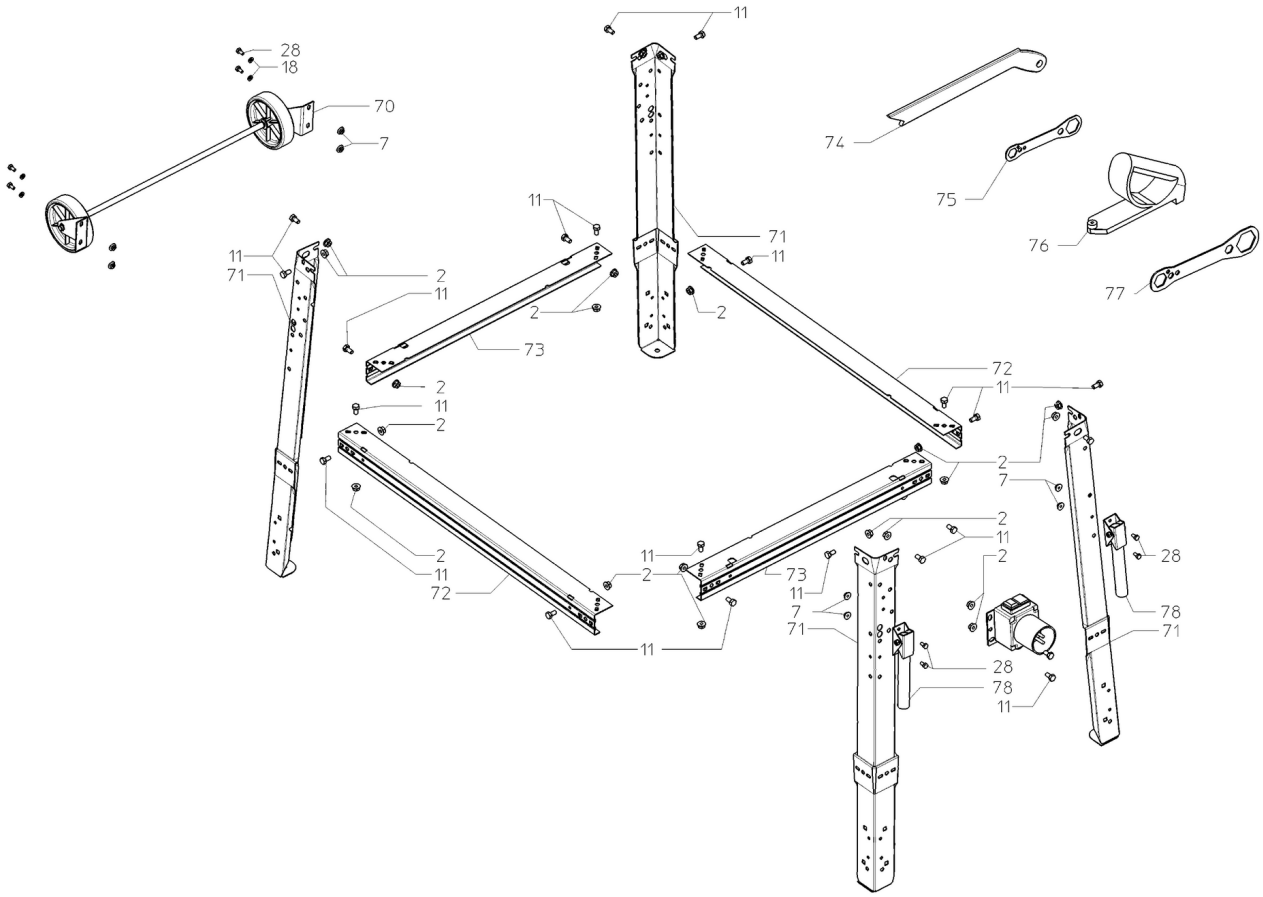
11
28
18
70
7
74
75
76
77
11
71
11
2
11
2
2
73
2
11
2
72
11
2
7
2
11
2
11
2
73
11
7
71
2
28
78
71
11
2
11
72
11
28
78
11

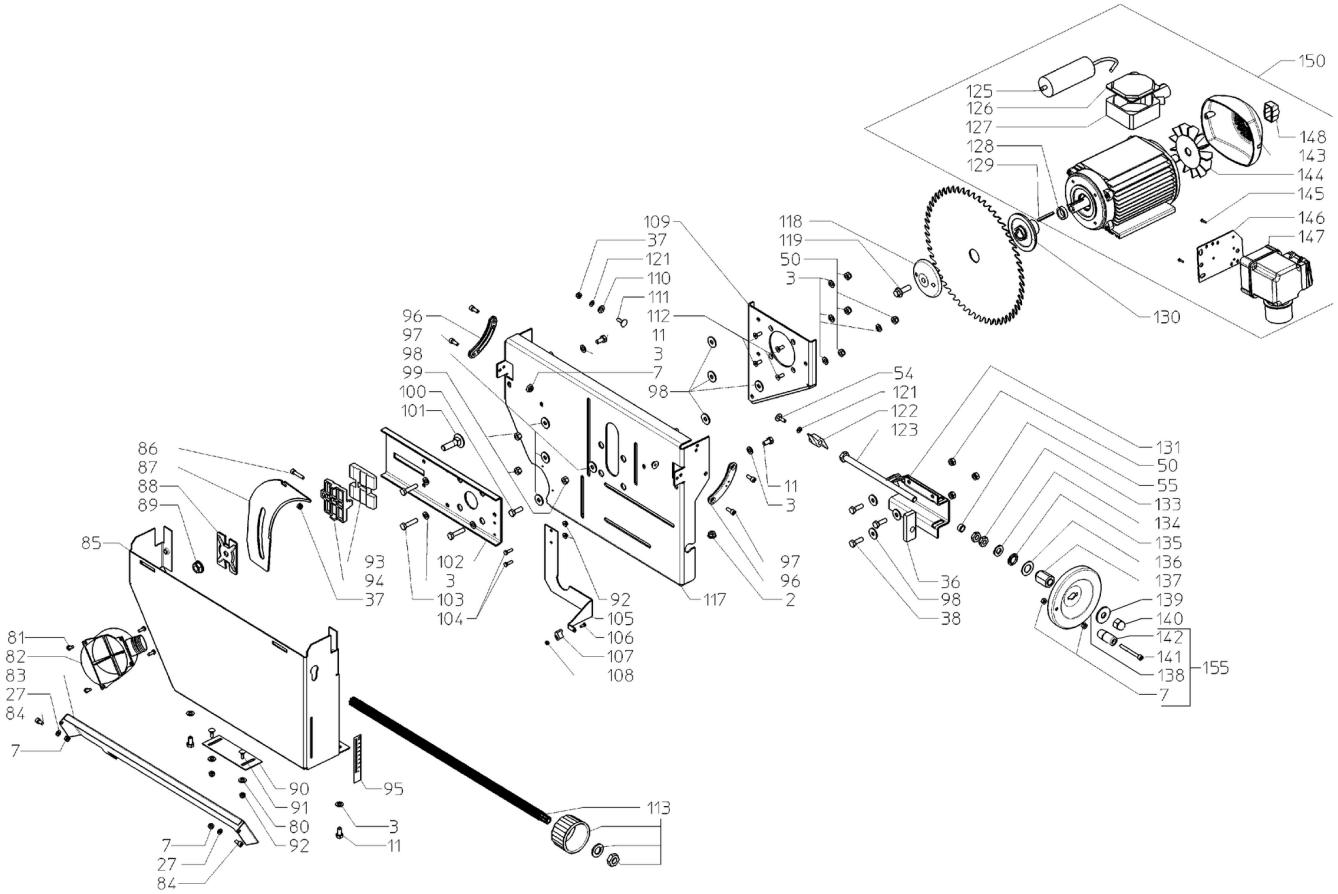
150
125
126
127
128
129
148
143
144
145
146
147
130
109
37
121
110
111
112
11
3
7
98
118
119
50
3
96
97
98
99
100
101
54
121
122
123
131
50
55
133
134
135
136
137
139
140
142
141
138
7
155
86
87
88
89
85
93
94
37
102
3
103
104
92
105
106
107
108
117
97
96
2
11
3
36
98
38
81
82
83
27
84
7
90
91
80
92
95
3
11
113
7
27
84

3,1 WNB

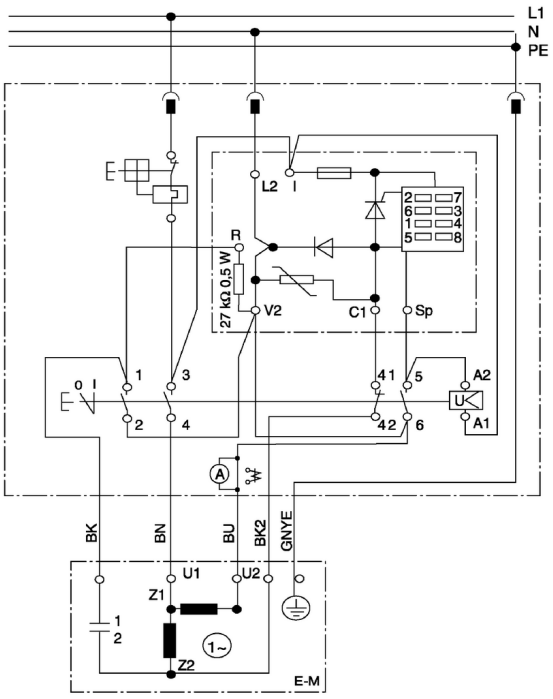

	Litzenfarben	Colour of strands	Couleur des cordons
BK	schwarz	black	noir
WH	weiß	white	blanc
BU	blau	blue	bleu
YE	gelb	yellow	jaune
RD	rot	red	rouge
TR	transparent	transparent	transparent
BN	braun	brown	brun
GY	grau	grey	gris
GNYE	grün-gelb	green-yellow	vert-jaune
BKWH	schwarz-weiß	black-white	noir-blanc
GN	grün	green	vert
OG	orange	orange	orange
VT	violett	violet	violet
TQ	türkis	turquoise	turquoise

	Bedeutung der Kurzzeichen	Meaning of the symbols	Interprétation des symboles
B	Stecker	plug	fiche
C	Kondensator	condenser	condensateur
D	Funkentstördrossel	interference suppression inductance	inductance d'antiparasitage
E	Elektronik-Baustein	electronic unit	unité électronique
I	Induktionsspule	induction coil	bobine d'inductance
K	Klemme	terminal	borne
L	Licht	light	lumière
M	Motor	motor	moteur
O	Überlastschutz	overload cut-out	déclencheur de surintensité
R	Drehrichtungsumschalter	reversing switch	commutateur droite-gauche
S	Schalter	switch	interrupteur
U	Umschalter	change-over switch	commutateur
X	Elektronik-Element	electronic element	élément électronique

Številka	Znesek	Številka za naročanje	Opis	PG
1	1	1382693309	EXTENSION PLATE BL 2,00X572X832 TKHS315M	40
2	41	6209110995	Flange nut	11
3	23	141151340	Washer	11
4	4	1395200611	BEARING BOLT	14
5	2	1382678121	SUPPORT BL 1,00X70X764,5 TVL	26
6	2	6132685086	HEX.SOCKET COUNTERS.HEAD SCREW M 6X10 VE	11
7	25	6209114230	Flange nut	11
8	2	1381693917	PLUG RD20/15-17X11,5	11
9	2	1382693828	BRACKET, PRESSURE ROLLER BD 2,99X64X213	21
10	1	1485693889	CROSSCUT FENCE GUIDE ROD RD 20X2X820 TKH	27
11	26	6103001178	Hex head screw	11
12	1	1382693856	ANGLE BRACKET BL 2,50X30X116	23
13	2	141123420	Self-tapp. counters. screw	11
14	1	2391091725	End piece	12
15	1	1391200145	PLUG QUERANSCHLAG	15
16	1	1393005315	FENCE EXTRUSION 300 MM	25
17	2	141124490	Truss head screw	11
18	21	141151940	Washer	11
19	4	6241125058	Knurled nut	12
20	1	7001144191	STARKNOB SCREW M 8X23 (DIN 933) VERZINKT	15
21	1	1390018033	STOP RULE	25
22	4	6172032905	CROSS REC'D PAN HEAD TAP.SCREW ST 3,5X16	11
23	1	6174155800	Self-tapp. counters. screw	11
24	1	1382409775	STOP RULE, LOWER BL 2,99 (N.ZCHNG)	27
25	1	1381410559	GLIDE PIECE	12
26	1	6264139374	CAGE NUT M 8 BLECHSTÄRKE 1,8-3,2	12
27	6	141130100	Hexagonal nut	11
28	12	141113290	Hexagon head screw	11
29	2	1381409879	GUIDE PIECE QUERANSCHLAG	14
30	1	1010017811	FENCE EXTRUSION 300 MM	27
31	1	1010170008	MITRE FENCE UNTERTEIL	33
32	6	6130019585	SLOTTED FLAT HEAD SCREW M 6X20 VERZ.	11
33	1	1382693287	TABLE PANEL BL 2,00X668X868 TKHS315M	39
34	1	1010186710	MITRE FENCE ASSEMBLY ET	42
35	1	1482693691	CHIP CASE GUIDE PANEL BL 2,00X163X440 HI	30
36	1	1482693179	BRACKET FL 25X10X65 TKHS315M	25
37	7	141130650	Hexagonal lock nut	12
38	4	141114860	Hexagon head screw	12
39	1	1381406667	REMOVABLE TABLE SECTION	24
40	1	1382693872	HOSE CARRIER BL 2,50X109X161 TKHS315M	25
41	1	1482408962	CAM PLATE BL 2,99XRD25/RDI 6,5	11
42	1	1382694607	GUARD PLATE BL 2,00X30X570 TKHS315M	21
43	2	6172028215	Fillister head screw	11
44	1	141150110	Washer	11
45	1	1142694260	SCALE 0,30X13X413 0,00-38,80 CM	18
46	1	7854158010	CORRUGATED HOSE RDI 36,2X1500 PROFIL D	27
47	1	1010738535	SAW BLADE GUARD W/SUCTION PORT TKHS315M	24
48	1	1142694464	ARBOR TILT SCALE 0,25X13 47-0 GRAD	16
49	1	1482693683	CHIP CASE GUIDE PANEL BL 2,00X163X440 VO	30
50	7	6202002305	HEXAGON NUT, PREV. TORQUE TYPE	11
51	2	1485412910	Spacer sleeve	12
52	2	6110000659	Truss head screw	11

Številka	Znesek	Številka za naročanje	Opis	PG
53	1	1383694279	FENCE GUIDE EXTRUSION 463 MM TKHS315M	28
54	3	6110031325	Truss head screw	11
55	1	1485693161	nut	20
56	1	1383680260	Angle,KGT 501	30
57	1	1383158458	RIP FENCE EXTRUSION 570 MM	31
58	1	1382680053	Locking element	33
59	2	6132087995	Countersunk screw	11
60	1	7016050711	STARLOCK	11
61	1	1392205620	Clamping plate,BL 1X26X91,5	12
62	1	6632111175	BOLT WITH HEAD	13
63	1	2390205484	Cam lock lever	19
64	1	1010680243	Parallel guide,KGT501/TKHS	44
70	1	1010692586	WHEEL SET TKHS315M GUMMIBEREIFT	29
71	4	1382693597	LEG BL 1,5X142X842 TKHS315M	29
72	2	1382407080	STANCHION BL 1,5X118X844 LANG	23
73	2	1382693813	STANCHION BL 1,5X118X644 KURZ / TKHS315M	23
74	1	343433180	Push stick	15
75	1	1392038481	OPEN END SPANNER BL 3X43/15X145 SW 19X14	15
76	1	1388680470	SLIDING HANDLE RED	31
77	1	1492102829	Key	20
78	1	1010689330	HANDLE BAR (PAIR) TKHS315C/M	20
80	2	141150120	Washer	11
81	4	6172001830	Fillister head screw	11
82	1	1381689227	DUST EXTRACTION PORT TKHS315C/M	19
83	1	1382694160	COVER BL 1,50X116X613,5 TKHS315M	27
84	2	141113840	Cap screw	12
85	1	1382694119	CHIPCASE BL 2,00X350X600 TKHS315M	42
86	1	6127059207	Cap screw	11
87	1	1010738551	SPLITTING BLADE TKHS315M	27
88	1	1382213749	PRESSURE PLATE BL 2,99X80X60	13
89	1	6209002432	FLANGE NUT	16
90	1	1382407110	SLIDE PLATE BL 1,5X48X137,5	12
91	2	6110125036	CUP SQUARE NECK SCREW M 5X16 VERZ.	11
92	4	6209018460	NUT AND WASHER ASSEMBLY	11
93	1	1380693263	RIVING KNIFE CARRIER HINTEN TKHS315M	22
94	1	1380693255	RIVING KNIFE CARRIER VORNE TKHS315M	22
95	1	1142694472	SCALE 0,25X20X114 0-85 MM	15
96	2	1380221442	SWIVEL SEGMENT	15
97	4	6127059193	HEXAGON SOCKET HEAD CAP SCREW	11
98	8	141150810	Washer	11
99	3	1385694012	HEXAGON NUT SW13 M8X7,6 TKHS315M	14
100	1	141110320	Hexagon head screw	12
101	1	6110019007	CUP SQUARE NECK SCREW M 12X50 VERZ.	12
102	1	1382693970	RIVING KNIFE CARRIER PLATE BL 2,99X150X3	29
103	3	141113330	Hexagon head screw	12
104	2	6121121296	HEXAGON SOCKET HEAD CAP SCREW	11
105	1	1382694003	POINTER, BLADE TILT BL 2,00X30X300 TKHS3	24
106	1	141124560	RAISED CHEESE HEAD SCREW	11
107	1	2391203523	POINTER RAL 3000-3003	11
108	1	141130930	Hexagonal lock nut	11
109	1	1382694143	MOTOR PLATE BL 2,99X250X300 TKHS315M	30
110	1	141155660	Cup spring	11

Številka	Znesek	Številka za naročanje	Opis	PG
111	1	6110000608	CUP SQUARE NECK SCREW	11
112	4	6132661454	HEX.SOCKET COUNTERS.HEAD SCREW	11
113	1	316097060	Rack compl.	26
117	1	1382693996	CHIP CASE BL 2,99X900X480 TKHS315M	42
118	1	1330025316	BLADE COLLAR, OUTER D 276	22
119	1	141122670	Hexagon head screw	25
121	8	141150130	Washer	11
122	1	7005155791	WING NUT M 6	13
123	1	6103694050	HEXAGON HEAD SCREW M 12X220 VERZ.	24
125	1	8050011829	Capacitor compl. 37,5uF/400V	28
126	1	1331409665	LID, MOTOR TERMINAL BOX	13
127	1	1331409657	LOWER CASING, MOTOR TERM. BOX	18
128	1	6442694557	SPACER SLEEVE RD 26,9/20,5X7 TKHS315M	16
129	1	6721041830	FEATHER KEY	11
130	1	1330025308	BLADE COLLAR, INNER	40
131	1	1382694038	HEIGHT-ADJUSTMENT BL 2,99 TKHS315M	29
133	2	6205055744	HEXAGON THIN NUT M 12 VERZ. FORM B	11
134	1	6300016705	Washer	11
135	1	7151694106	FRICTION BEARING S GFM-1820-04	15
136	1	7104694092	CHECK WASHE GTM-1832-015 TKHS315M	19
137	1	1485694087	COLLAR NUT 6KT SW24X37/M12 TKHS315M	18
138	1	1382411257	HANDWHEEL BL 2X RD 165	20
139	1	6305002508	WASHER B 13 VERZ.	11
140	1	6201002158	CAP NUT M 12 VERZ.	12
141	1	6121112564	HEXAGON SOCKET HEAD CAP SCREW	11
142	1	7004017433	TURNING TANG	14
143	1	1331408847	FAN COVER 120/13	14
144	1	1331408839	FAN WING 120/13 WELLEND. 16	18
145	2	6174001950	COUNTERSUNK HEAD TAPPING SCREW ST 4,2X25	11
146	1	1382694690	SWITCH PLATE BL 2,00X108X135 TKHS315M	25
147	1	8131079622	SWITCH SSK WN 230V 14A KSVSW	51
148	1	1381083779	CAP MOTORWELLE	11
155	1	1010702140	HANDWHEEL KPL. TKHS315M	24