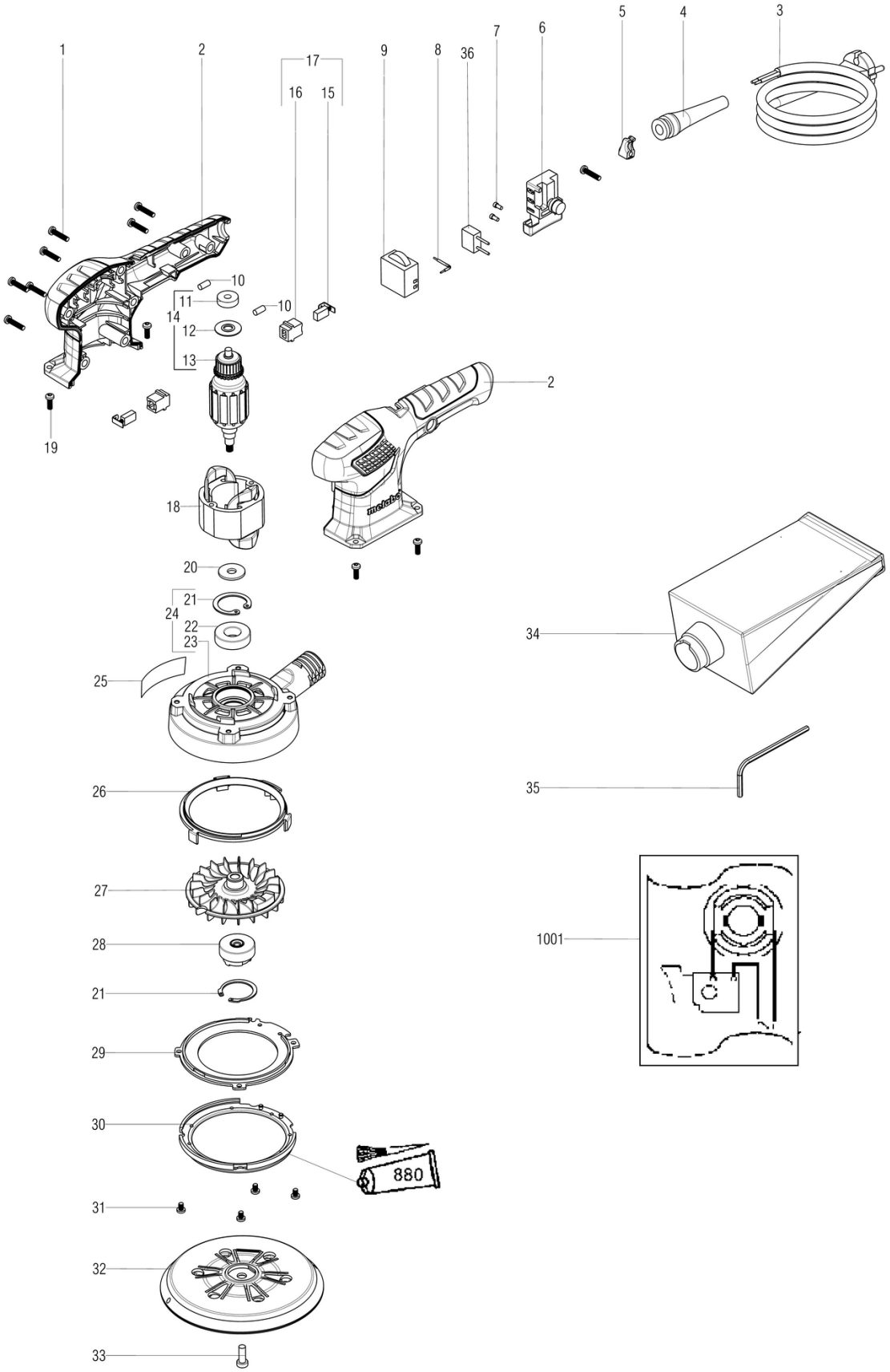
1
2
17
16
15
9
8
36
7
6
5
4
3
10
11
14
12
13
10
2
19
18
20
21
24
22
23
25
34
35
26
27
28
21
29
30
880
31
32
33
1001

Številka	Znesek	Številka za naročanje	Opis	PG
1	8	141116020	Self-tap fill h screw	12
2	1	343436420	Housing	25
3	1	344493180	Cable with CEE plug	27
4	1	344101140	Cable sleeve	13
5	1	343362490	Cable clip	12
6	1	343410540	Switch	19
7	2	141116970	Fillister head screw	12
8	1	344499790	Cable	12
9	1	343084670	Electronic unit (f.SXE 3125)	24
10	2	344092220	Rubber plug	11
11	1	143115660	Ball bearing, 6x19x6	13
12	1	343436390	Insulating washer	11
13	1	310012030	Armature,230V	29
14	1	316060510	Armature compl.,230V (disc sander)	35
16	2	343001340	Brush holder	17
17	1	316060550	Carbon brush set	19
18	1	311012580	Field coil,230V	27
19	4	141120070	Fill. head screw	11
20	1	341013290	washer	11
21	2	141180710	Ring	14
22	1	143112030	Ball bearing, 15x32x9	26
23	1	315202840	Bearing flange	25
24	1	316060520	Flange compl.	29
25	1	338064150	Rating plate	11
26	1	343440850	Baffle	11
27	1	330006950	Fan	29
28	1	316061820	Carrier cpl.	31
29	1	343436410	Cover f. fan	12
30	1	344099810	Brake ring	17
31	4	141124530	Cheese-head screw	11
32	1	344101970	Backing plate cpl.	28
33	1	141124520	Cheese-head screw	11
34	1	344101410	Dust bag	23
35	1	344161520	Cranked wrench key	12
36	1	343254850	capacitor	11
880	1	344130130	Grease SF 016 50Gr 1,8oz	29