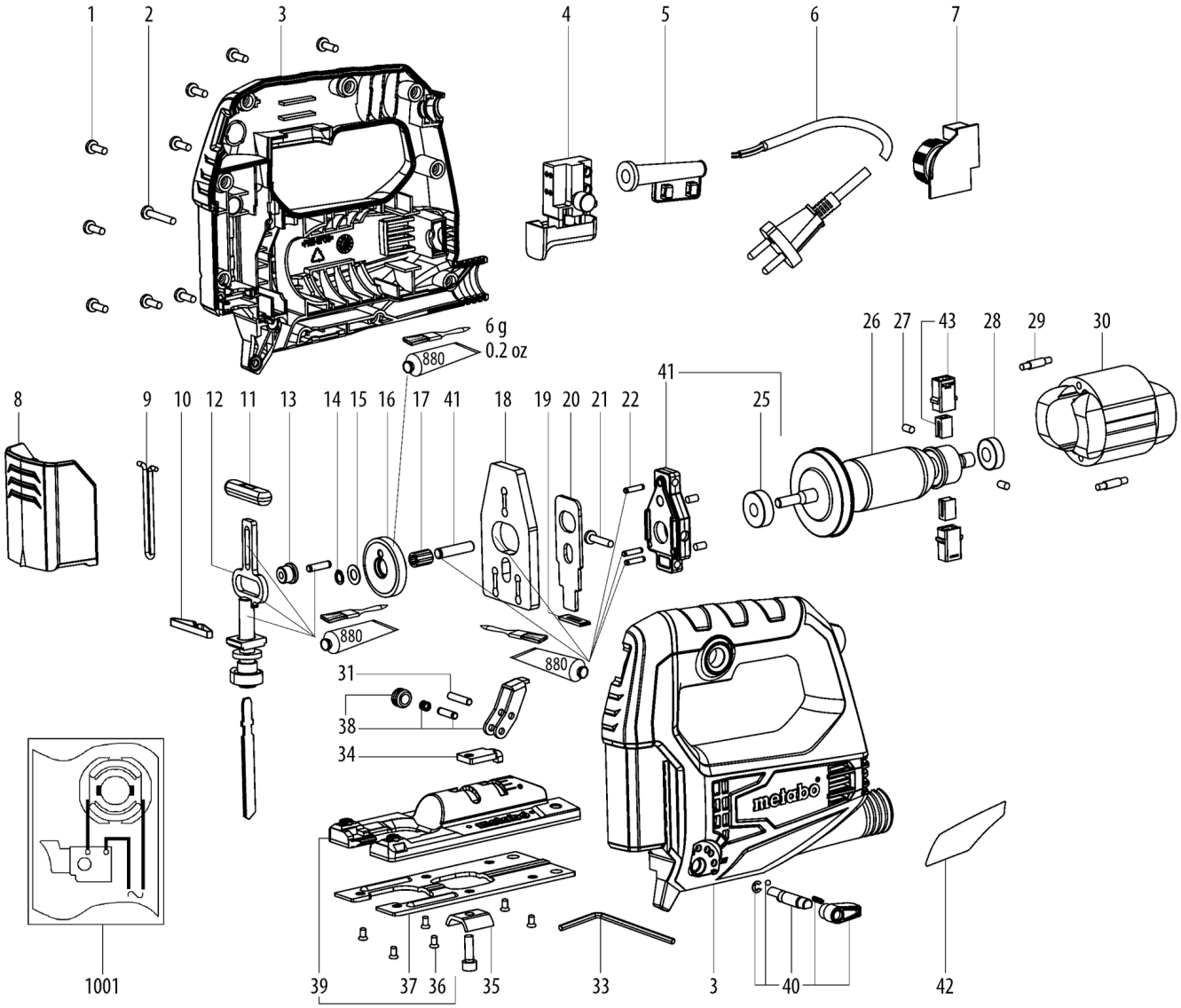
1
2
3
4
5
6
7
6 g
0.2 oz
880
26
27
43
28
29
30
41
8
9
10
12
11
13
14
15
16
17
41
18
19
20
21
22
25
880
880
31
38
34
metabo
1001
39
37
36
35
33
3
40
42

Številka	Znesek	Številka za naročanje	Opis	PG
1	9	141123760	Fillister head screw	11
2	1	341722390	Screw	11
3	1	316095100	Housing compl.	28
4	1	343442820	Switch	19
5	1	344113350	Cable sleeve	11
6	1	344493180	Cable with CEE plug	27
7	1	343085390	Electronic unit	21
8	1	344350490	Eye shield	12
9	1	342200730	Protective strap	11
10	1	341071820	spring piece	11
11	1	343442830	Guide	12
12	1	316093390	Pressure plate cpl.	23
13	1	341071840	Guide roller	11
14	1	6400071061	RETAINING RING FOR SHAFTS 6X0,7	11
15	1	141152070	Washer	11
16	1	341166010	Gear	19
17	1	342200740	Needle sleeve	11
18	1	339148040	Balancing plate	18
19	1	343442840	Dust protection	11
20	1	341166460	Plate	18
21	1	341722400	Screw	11
22	3	341525350	Pin	11
25	1	143115700	Ball bearing,8x22x7	14
26	1	310011860	Armature compl.	29
27	4	344113360	Rubber plug	11
28	1	143111610	Ball bearing, 7x19x6	24
29	1	344530400	Strand compl.	13
30	1	311012440	Field w.coil	27
31	1	341525340	Pin	11
33	1	344161530	Hexagonal key	12
34	1	339148050	Locking plate	11
35	1	339148060	Champing claw	11
36	6	341722420	Countersunk screw	11
37	1	316093400	Base plate compl.	16
38	1	316093410	Supporting lever compl.	14
39	1	316093420	Base plate compl.	23
40	1	316093430	Switch lever cpl.	11
41	1	316093440	Balancing plate compl.	16
42	1	338065070	Rating plate	11
43	1	343013370	Carbon brush set	15
1001	1	338510230	Wiring diagram	