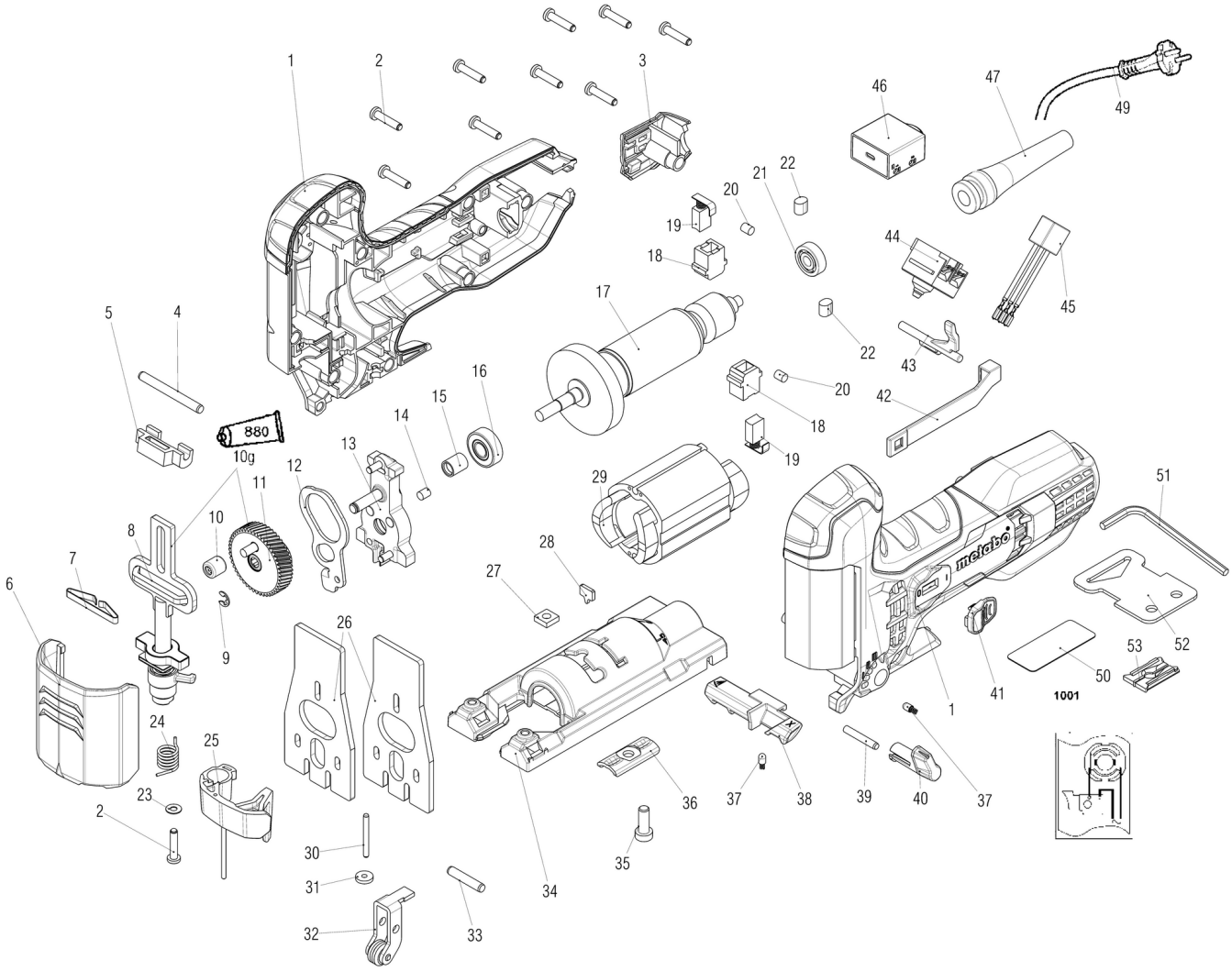
1
2
3
4
5
6
7
8
9
10
10g
11
12
13
14
15
16
17
18
19
20
21
22
23
24
25
26
27
28
29
30
31
32
33
34
35
36
37
38
39
40
41
42
43
44
45
46
47
49
50
51
52
53
880
1001
metabo

Številka	Znesek	Številka za naročanje	Opis	PG
1	1	343411260	Housing	28
2	10	141116020	Self-tap fill h screw	12
3	1	343443090	Cover	12
4	1	141164050	Cylindrical pin	11
5	1	341070660	Guide piece top	11
6	1	343411270	Eye shield	13
7	1	342024210	Flat spring	11
8	1	316097840	Ram compl.	29
9	1	141181810	Circlip	11
10	1	320054610	Needle bearing	19
11	1	316095050	Spur gear compl.	25
12	1	339137490	Pressure plate	12
13	1	316095060	BEARING BRIDGE COMPL.	23
14	1	344098660	Rubber plug	11
15	1	343380060	Cover brush	11
16	1	143115800	Ball bearing, 8x22x7	13
17	1	310011950	Armature cpl. 230 V	31
18	2	343003110	Brush holder	11
19	1	316093320	Carbon brush set	21
20	2	344092220	Rubber plug	11
21	1	143115660	Ball bearing, 6x19x6	13
22	2	344091420	Rubber plug	11
23	1	141150010	Washer	11
24	1	342022180	Spring clip	11
25	1	316093880	Lever compl.	14
26	2	339148140	Balancing plate	18
27	1	141131370	Square nut	11
28	1	339129310	position plate	11
29	1	311012530	Field coil compl.,230V	28
30	1	341519670	Cylindrical pin	11
31	1	339007300	Washer	11
32	1	316043470	Supporting lever compl.	20
33	1	141164040	Cylindrical pin	11
34	1	316097020	Base plate compl.	25
35	1	141122300	Cap screw	11
36	1	339133640	Champing claw	11
37	2	342001140	Index bolt	12
38	1	343411240	Slider	12
39	1	141163320	Cylindrical pin	11
40	1	343411230	Control knob	11
41	1	343411160	Switch slide	11
42	1	343411250	Switch rod	11
43	1	343443080	Pressure plate	11
44	1	343411570	Switch	19
45	1	343255100	Triangle capacitor	13
46	1	343085640	speed dial	29
47	1	344101140	Cable sleeve	13
49	1	344493180	Cable with CEE plug	27
50	1	338067520	Rating plate	11
51	1	344161530	Hexagonal key	12
52	1	344099160	Holder	11
53	1	343395480	Anti-splintering insert	11

Številka	Znesek	Številka za naročanje	Opis	PG
880	1	344130930	Grease 50Gr 1,8oz	35
1001	1	338506210	Wiring diagram	