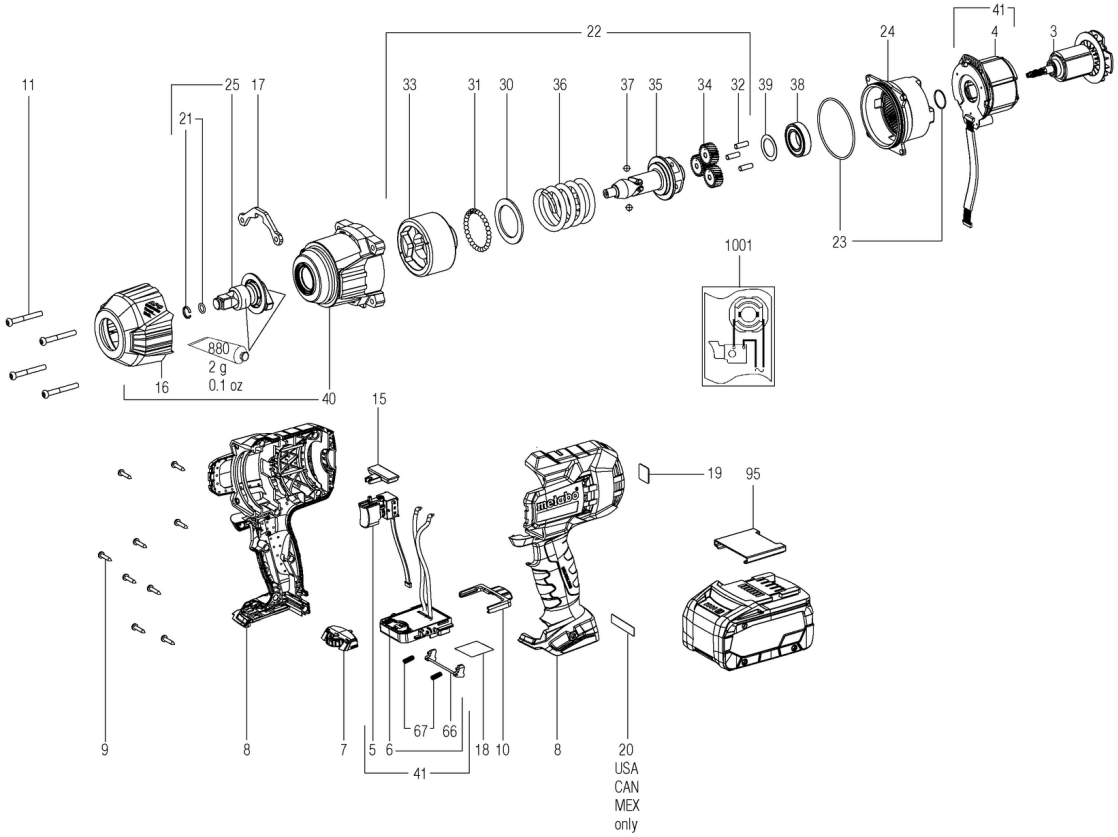
11
25
17
21
22
33
31
30
36
37
35
34
32
39
38
24
41
4
3
23
1001
880
2 g
0.1 oz
16
40
15
19
95
9
8
7
5
6
67
66
18
10
8
20
USA
CAN
MEX
only
41

Številka	Znesek	Številka za naročanje	Opis	PG
3	1	310013130	rotor compl.	34
4	1	311013220	stator compl. 18 V	47
5	1	343412340	switch, DC 18V	23
6	1	343087800	electronic assembly, SSW 18 LTX 1750 BL	36
7	1	316070660	Selector wheel compl.	24
8	1	343454060	Housing w. cover	31
9	9	141113180	Self-tap. fill. h. screw	11
10	1	343447510	Locking slide	11
11	4	341705550	fillister head screw	13
15	1	343450300	switch slide R/L	11
16	1	343450620	cap 1/2 inch	22
17	1	339138690	fastening plate	12
18	1	338074880	Rating plate 02401000 SSW 18 LTX 1450	11
19	1	338129960	Indication label, CAS	12
20	1	399999990	Part not needed	
21	1	316069140	round wire ring w. o-ring 1/2 inch	11
22	1	316074880	Impact mechanism compl. 1/2 inch	45
23	1	316071220	Sealing set	11
24	1	316071230	gear flange compl.	34
25	1	316071250	anvil compl. 1/2 inch	32
30	1	339008560	washer 36.3x50.5x2	12
31	28	143116210	Ball	17
32	3	341516540	Cylindrical pin	17
33	1	341214010	striker 1/2 inch	35
34	3	340013280	planetary gear	30
35	1	341213630	cam shaft	35
36	1	342004460	Preasure spring 1/2 inch	22
37	2	143116190	Ball DIN 5401- 6,5mm G20	11
38	1	143116200	Ball bearing 6904 - 20x37x9 - JN	15
39	1	316078260	Shim set	12
40	1	315105980	Gear housing w. rubber cap	32
41	1	343090740	electronic unit with stator compl	53
66	1	316066720	Latch compl.	14
67	2	342004180	Pressure spring	11
95	1	343439680	Cover cap	11
880	1	344130650	Grease GL 402	22
1001	1	338506610	Wiring diagram	