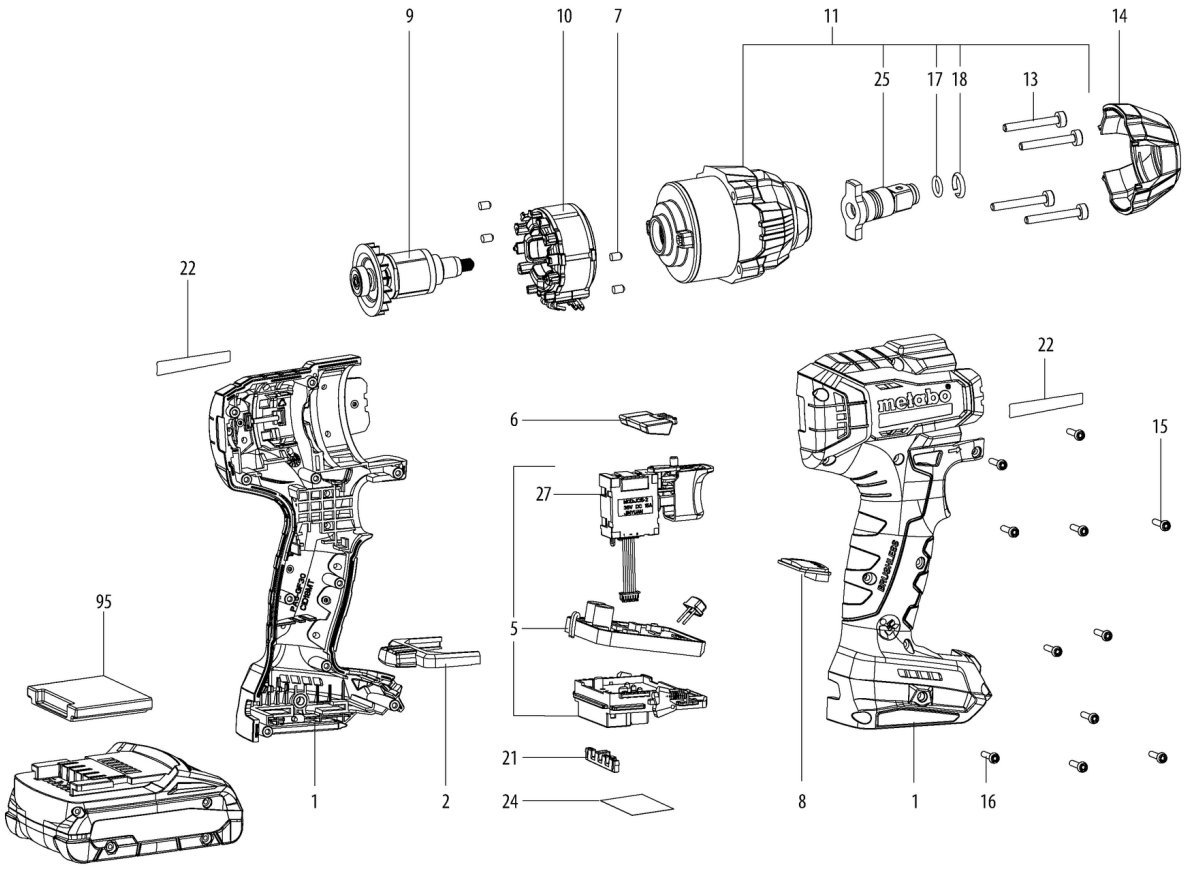
9
10
7
11
14
25
17
18
13
22
6
27
5
21
24
95
1
2
8
1
16
22
15

Številka	Znesek	Številka za naročanje	Opis	PG
1	1	343457960	rubber housing (TPE)	30
2	1	343457970	Button	14
5	1	343089690	Control Board cpl.	47
6	1	343457980	F R Button	11
7	4	344104250	Rubber plug	11
8	1	343089700	Panel	11
9	1	310013610	Rotor set	34
10	1	311013680	Stator	33
11	1	316074360	Gear Case Set	29
13	4	341705690	Screw	11
14	1	344104260	Rubber Sheath	16
15	10	341705700	Self-tap. fill. h. screw	11
16	1	341705710	Screw	11
17	1	344104270	O-ring	11
18	1	339012520	E Ring	11
21	1	343447010	Insert	11
22	1	338135160	Nameplate	11
24	1	338078790	Rating plate	11
25	1	316080410	Spindle compl.	24
27	1	343413840	Switch,R+L	26
95	1	399999990	Part not needed	