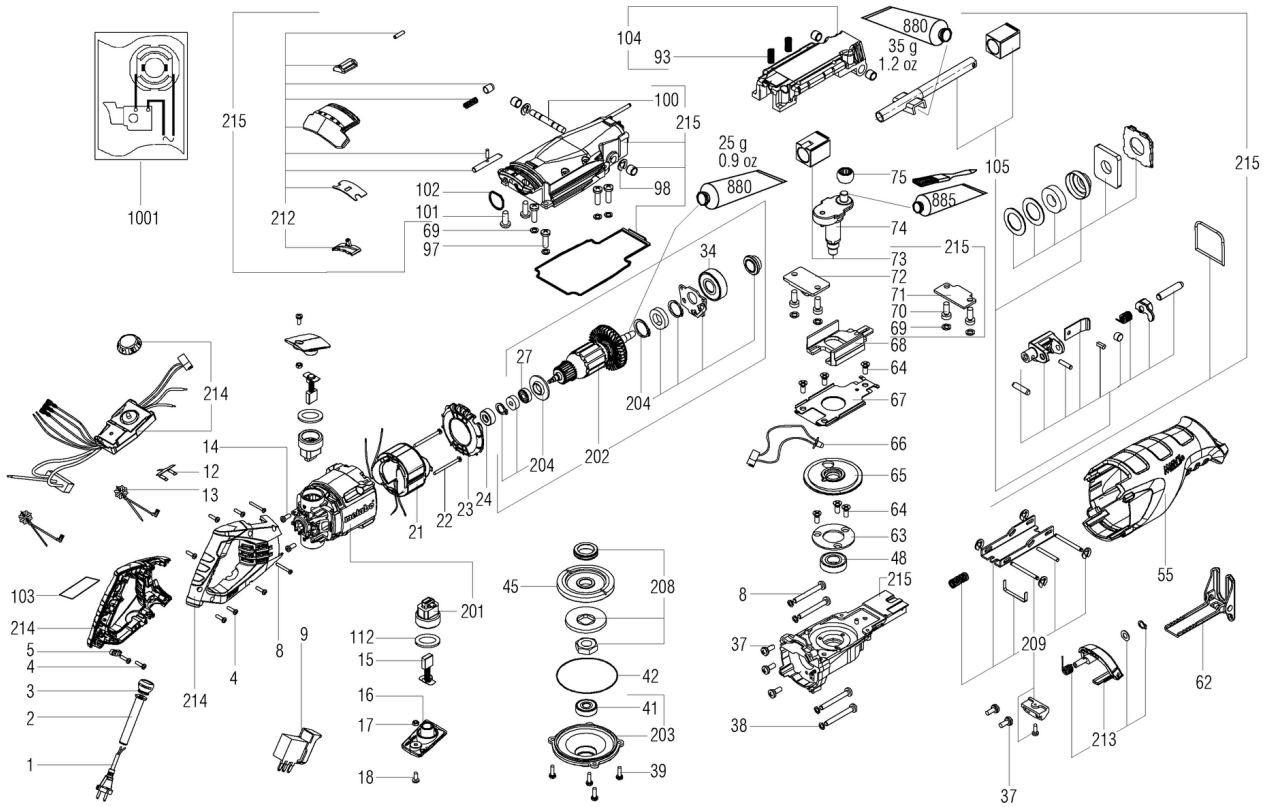
1001
215
212
104
93
100
215
102
101
69
97
98
880
35 g
1.2 oz
25 g
0.9 oz
880
75
885
74
215
73
72
71
70
69
68
64
67
66
65
64
63
48
215
8
37
38
105
215
55
209
62
213
37
34
27
204
202
204
214
14
12
13
21
22
23
24
103
214
5
4
3
2
1
214
4
8
9
201
112
15
16
17
18
45
208
42
41
203
39

Številka	Znesek	Številka za naročanje	Opis	PG
1	1	344530440	Cable with plug	31
2	1	344113370	Cable with plug	13
3	1	344113380	Cable with plug	12
4	8	141116800	Self-tap. fill. h. screw	11
5	1	343442950	CABLE CLAMP	11
8	6	341722430	Self-tap. fill. h. screw	11
9	1	343442970	Switch	33
12	1	343085460	Terminal	11
13	2	343254990	Choke	17
14	2	341722440	Self-tap. fill. h. screw	11
15	1	316093540	Carbon brush	24
16	2	344113390	Brush Cover	16
17	2	141130070	Hexagonal nut	11
18	2	141124560	RAISED CHEESE HEAD SCREW	11
21	1	311012450	Field	34
22	2	341722450	Self-tap. fill. h. screw	11
23	1	343443000	Blank faceplate	12
24	1	320054180	Bearing sleeve	11
27	1	320054190	Ball bearing	14
34	1	320054200	Ball bearing	16
37	5	341722460	Self-tap. fill. h. screw with disc	11
38	4	341109030	Washer	11
39	4	341722470	Self-tap. fill. h. screw with disc	11
41	1	320054210	Ball bearing	16
42	1	341166180	Ring (airproof)	11
45	1	341166110	Gear	31
48	1	320054220	Ball bearing	17
55	1	344113400	Rubber sleeve	34
62	1	339148100	Supporing Angle	20
63	1	344113410	Cover (f. bearing)	12
64	6	341722490	Screw	11
65	1	341166120	Transformation ring	25
66	1	344530500	Power Supply Board	22
67	1	344113420	Middle cover	16
68	1	339148110	Counterweight	28
69	8	339009380	Washer	11
70	4	341722480	Self-tap. fill. h. screw with disc	11
71	1	339148120	Pressure plate	11
72	1	339148130	Pressure plate cpl.	23
73	1	339013010	Bearing block	19
74	1	341166140	Pinion shaft	30
75	1	320054230	Needle bearing	22
93	1	342010930	Pressure spring	11
97	4	316093660	Screw compl.	11
98	2	342024160	sealing ring	11
100	1	341166160	Shaft	13
101	2	341722500	Screw	11
102	1	341166170	Ring (airproof)	11
103	1	338065190	Rating plate	11
112	2	341722780	Washer	11
201	1	316093550	Housing compl.	25
202	1	310011870	Armature compl.	47

Številka	Znesek	Številka za naročanje	Opis	PG
203	1	316093560	Base plate	25
204	1	310150070	Rotor ASSEMBLY fixing kit	30
208	1	316093570	clamp kit cpl.	16
209	1	316093580	Supporing Angle compl.	20
212	1	316093650	change-over switch cpl.	19
213	1	316093590	Clamping lever cpl.	16
214	1	316096630	Speed assembly with grip	38
215	1	316076490	Gear housing	52
1001	1	338510140	Wiring diagram	