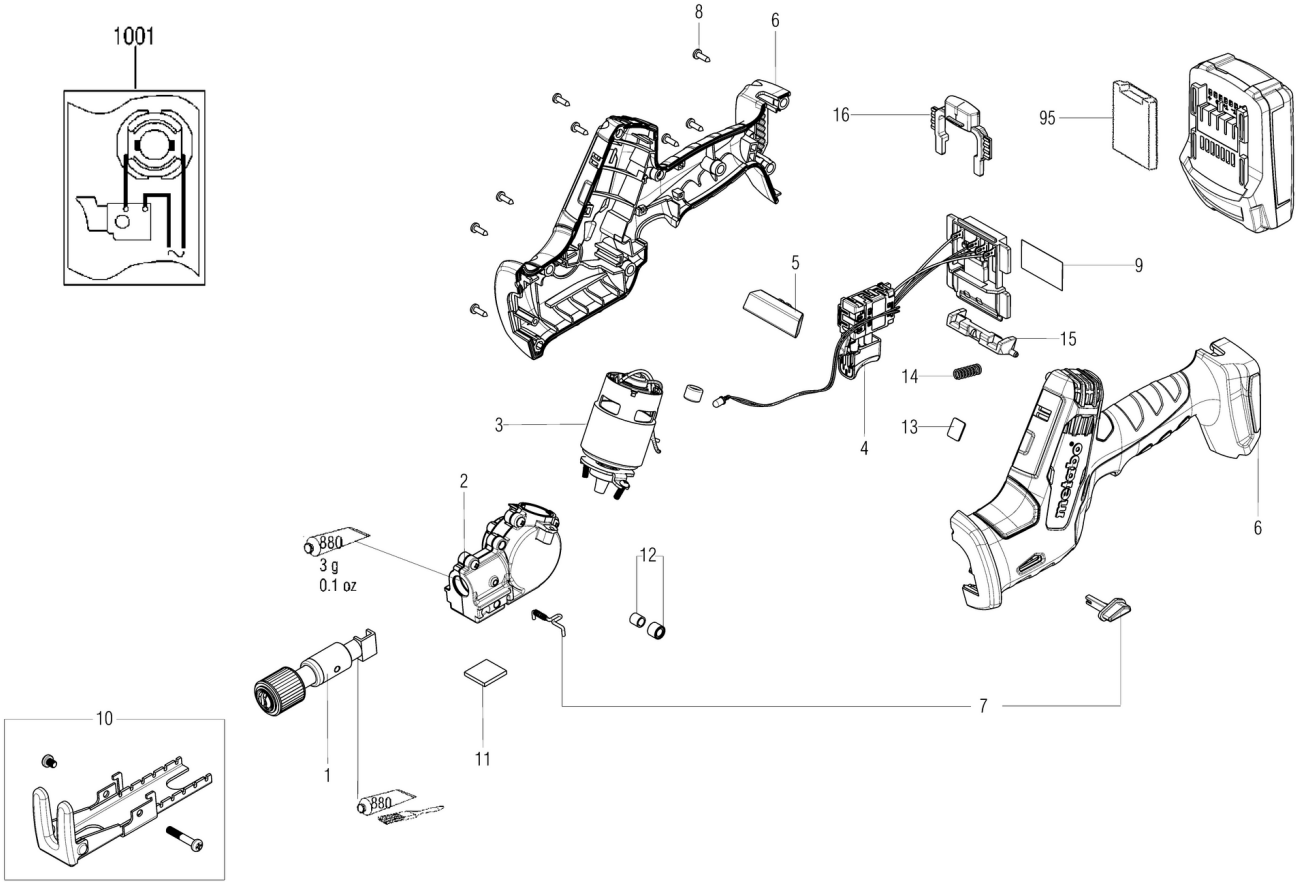
1001
8
6
16
95
5
9
15
14
3
13
4
2
6
880
3 g
0.1 oz
12
7
10
1
11
880

Številka	Znesek	Številka za naročanje	Opis	PG
1	1	316051510	Ram compl.	32
2	1	316096150	Gear-box	33
3	1	316096020	Motor compl.	33
4	1	343411380	Power switch	32
5	1	343411390	Change-over switch	11
6	1	343411400	Housing	28
7	1	316096140	Detent cpl.	14
8	8	141124780	Self-tap. fill. h. screw	11
9	1	338067720	NAME PLATE	11
10	1	316051660	Guide compl.	21
11	1	344070970	Felt	11
12	1	320050810	Needle bearing	20
13	1	338129940	Indication label	12
14	1	342003030	Pressure spring	11
15	1	343430520	Locking piece	11
16	1	343438580	Locking slide	12
95	1	343439680	Cover cap	11