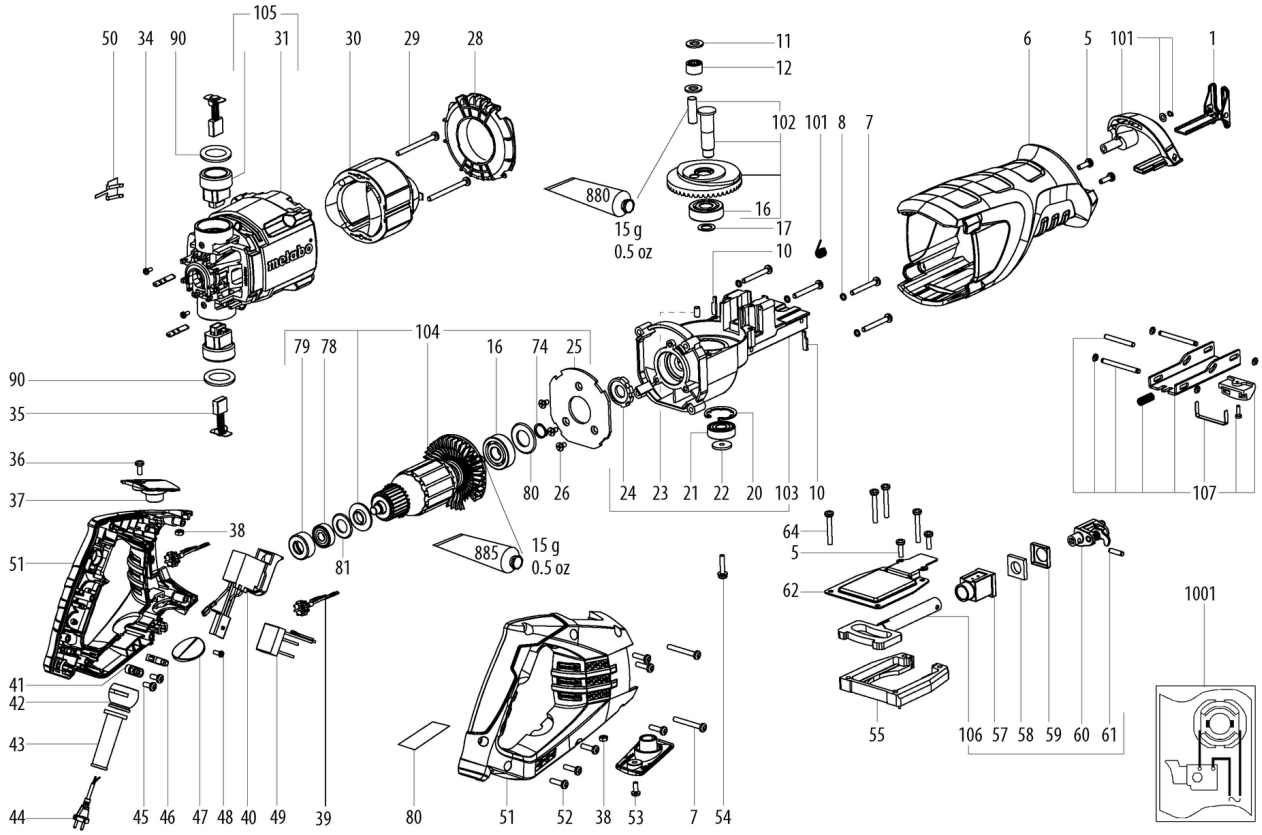
105
50 34 90 31 30 29 28
11
12
102 101 8 7
6 5 101 1
880
15 g
0.5 oz
16
17
10
104
79 78 16 74 25
90
35
36
37
38
51
81
885
15 g
0.5 oz
80 26
24 23 21 22 20 103 10
107
64
5
62
1001
55
106 57 58 59 60 61
41
42
43
44
45 46 47 48 40 49 39
80 51 52 38 53 7 54

Številka	Znesek	Številka za naročanje	Opis	PG
1	1	339148100	Supporing Angle	20
5	4	341722550	Screw	11
6	1	341020180	Sleeve	32
8	4	341109030	Washer	11
10	2	344113430	Gasket	11
11	2	344113440	Flat gasket ring	11
12	1	320054240	Needle bearing	19
16	2	320054250	Ball bearing	17
17	1	339009390	Washer	11
20	1	342024180	sealing ring	11
21	1	320054260	Ball bearing	14
22	1	339009400	Washer	11
23	1	341525380	Pin	11
24	1	344000360	Sealing ring	11
25	1	343443020	Laser Cover	14
26	3	341722510	Screw	11
28	1	343443000	Blank faceplate	12
29	2	341722450	Self-tap. fill. h. screw	11
30	1	311012520	Field	33
34	2	341722530	Screw	11
35	1	316093540	Carbon brush	24
36	2	141124560	RAISED CHEESE HEAD SCREW	11
37	2	344113390	Brush Cover	16
38	2	141130070	Hexagonal nut	11
39	2	343254990	Choke	17
40	1	343411200	Switch	31
41	1	343442950	CABLE CLAMP	11
42	1	344113380	Cable with plug	12
43	1	344113370	Cable with plug	13
44	1	344530560	Power Cable	28
45	2	141116800	Self-tap. fill. h. screw	11
46	1	343050320	Terminal	11
47	1	343385020	Cover	11
48	1	341722520	Screw	11
49	1	343443070	Condenser	15
50	1	343085460	Terminal	11
51	1	343442960	soft grip (right and left)	27
52	6	141116800	Self-tap. fill. h. screw	11
53	6	341722430	Self-tap. fill. h. screw	11
54	1	341722540	Screw	11
55	1	341166220	Plate	25
62	1	343443040	Cover (f Carbon brush)	14
64	4	341722560	Screw	11
74	1	342024190	sealing ring	11
78	1	320054190	Ball bearing	14
79	1	320054180	Bearing sleeve	11
80	1	338065230	Rating plate	11
90	2	341722780	Washer	11
101	1	316093590	Clamping lever cpl.	16
102	1	316093710	Gear-box compl.	32
103	1	316093720	Gear housing compl.	31
104	1	316093730	Armature compl.	38

Številka	Znesek	Številka za naročanje	Opis	PG
105	1	316093740	Motor housing compl.	27
106	1	316093750	Holder	33
107	1	316093580	Supporing Angle compl.	20
1001	1	338510150	Wiring diagram	