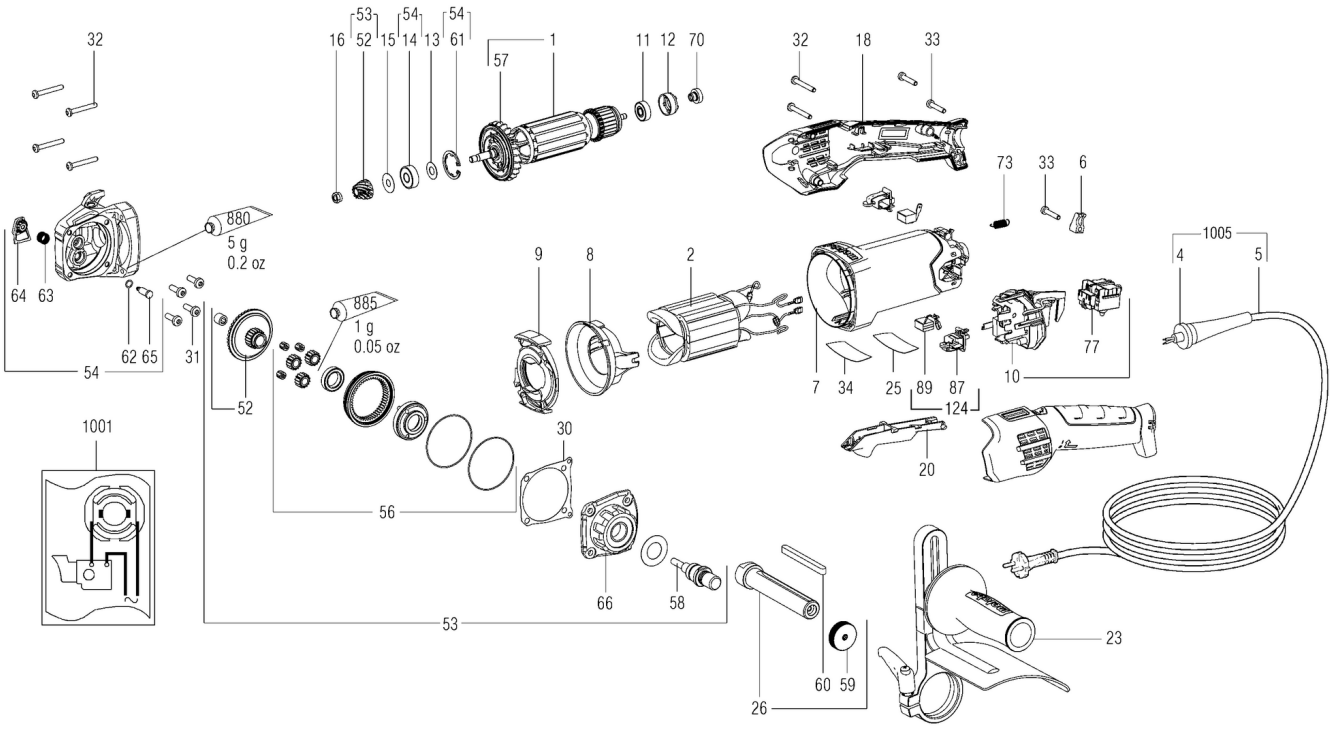
32
16
53
52
15
54
14
13
54
61
1
57
11
12
70
32
18
33
73
33
6
1005
4
5
880
5 g
0.2 oz
64
63
62
65
31
54
52
885
1 g
0.05 oz
9
8
2
7
34
25
89
87
124
10
77
20
1001
56
30
66
58
53
26
60
59
23

| Številka | Znesek | Številka za naročanje | Opis | PG |
|---|---|---|---|---|
| 1 | 1 | 310010990 | Armature compl., 230V | 36 |
| 2 | 1 | 311012980 | Field coil assembly 230V | 31 |
| 4 | 1 | 399999990 | Part not needed | |
| 5 | 1 | 399999990 | Part not needed | |
| 6 | 1 | 343362490 | Cable clip | 12 |
| 7 | 1 | 315013790 | Motor housing | 21 |
| 8 | 1 | 339151180 | Baffle | 11 |
| 9 | 1 | 339151200 | Baffle | 11 |
| 10 | 1 | 316064460 | electronic unit w.switch | 33 |
| 11 | 1 | 143115690 | Ball bearing,6x19x6 | 13 |
| 12 | 1 | 344097870 | Rubber bushing | 11 |
| 13 | 1 | 339133060 | Washer,8,05x17x0,4 | 11 |
| 14 | 1 | 143115700 | Ball bearing,8x22x7 | 14 |
| 15 | 1 | 339006390 | Washer,7,05x19,5x0,2 | 11 |
| 16 | 1 | 341100940 | Hexagon nut w.recess | 12 |
| 18 | 1 | 316076120 | Handle 2 part | 25 |
| 20 | 1 | 316065300 | Switch trigger compl. | 13 |
| 23 | 1 | 316064830 | Wheel guard compl. | 35 |
| 25 | 1 | 399999990 | Part not needed | |
| 26 | 1 | 316052550 | Arbor compl.,M14 | 39 |
| 30 | 1 | 339012430 | Gasket | 11 |
| 31 | 4 | 141121640 | Fill. head screw(DIN 7985) | 11 |
| 32 | 6 | 141116980 | Self-tap. fill. h. screw | 11 |
| 33 | 3 | 141117060 | Self-tap. fill. h. screw | 12 |
| 34 | 1 | 338068900 | Rating plate | 11 |
| 52 | 1 | 316066130 | Bevel gear w.pinion | 35 |
| 53 | 1 | 316067080 | Gear flange compl. | 49 |
| 54 | 1 | 316064710 | Gear housing compl. | 30 |
| 56 | 1 | 316066110 | Planet wheel set, compl. | 36 |
| 57 | 1 | 316054850 | Fan w. dust guard | 15 |
| 58 | 1 | 341605360 | Spindle shaft | 24 |
| 59 | 1 | 341112840 | Knurled screw | 26 |
| 60 | 1 | 141156230 | Adjusting spring | 11 |
| 61 | 1 | 141156650 | Retaining ring | 11 |
| 63 | 1 | 342003390 | Pressure spring | 11 |
| 64 | 1 | 343433640 | Push button | 11 |
| 65 | 1 | 316083490 | bolt compl. | 16 |
| 66 | 1 | 316066120 | Flange compl. | 29 |
| 70 | 1 | 343433060 | Tacho disc | 13 |
| 73 | 1 | 342004190 | Pressure spring | 11 |
| 77 | 1 | 343410270 | Switch 2-pole,X2 | 21 |
| 87 | 1 | 316065420 | Brush holder set | 23 |
| 89 | 1 | 316065450 | Carbon brush set cut-off | 22 |
| 124 | 1 | 316067170 | carbonbrush with brusholder Set 230V | 27 |
| 880 | 1 | 344130920 | Grease 100G | 31 |
| 885 | 1 | 344130560 | Grease SF 011 50Gr 1,8oz | 33 |
| 1001 | 1 | 338506170 | Diagram | |
| 1005 | 1 | 316067320 | Cable with sleeve | 27 |