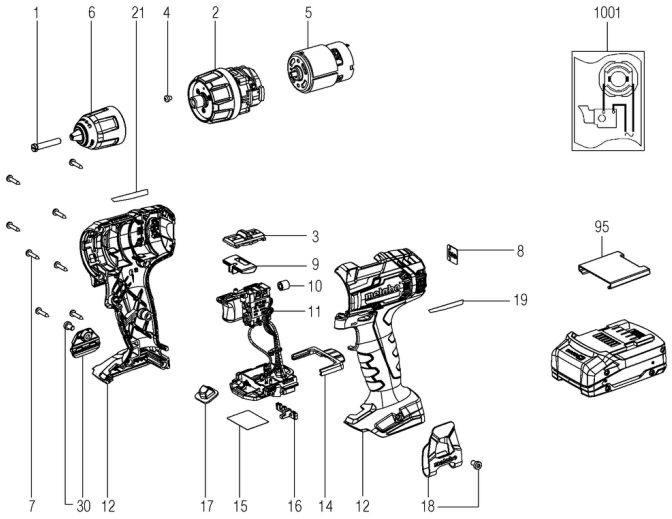
1
6
21
4
2
5
1001
3
9
10
11
8
19
95
7
30
12
17
15
16
14
12
18

Številka	Znesek	Številka za naročanje	Opis	PG
1	1	341705050	Cap screw	11
2	1	316075080	Gear-box cpl.	31
3	1	316075920	Switch slide H-L compl.	13
4	1	341705450	Fillister head screw	11
5	1	316075100	Motor compl.	29
6	1	301010660	short Keyless Chuck	24
7	8	141113180	Self-tap. fill. h. screw	11
8	1	338129960	Indication label, CAS	12
9	1	343410580	Switch,R+L	11
10	1	143160140	Toroidal Ferrite	12
11	1	343413070	Electronic switch 18 V	29
12	1	316079930	housing w. cover	26
14	1	343447510	Locking slide	11
15	1	338079950	Rating plate 14053000 SB 18 L	12
16	1	343447010	Insert	11
17	1	343083380	LED lense	13
18	1	339137270	Hook	13
19	1	338136000	Nameplate 14053000 SB 18 L	12
21	1	338139330	Nameplate 14053000 SB 18 L	12
30	1	343448690	bit-depot 18 V	13
95	1	343439680	Cover cap	11
1001	1	338506330	Diagram	