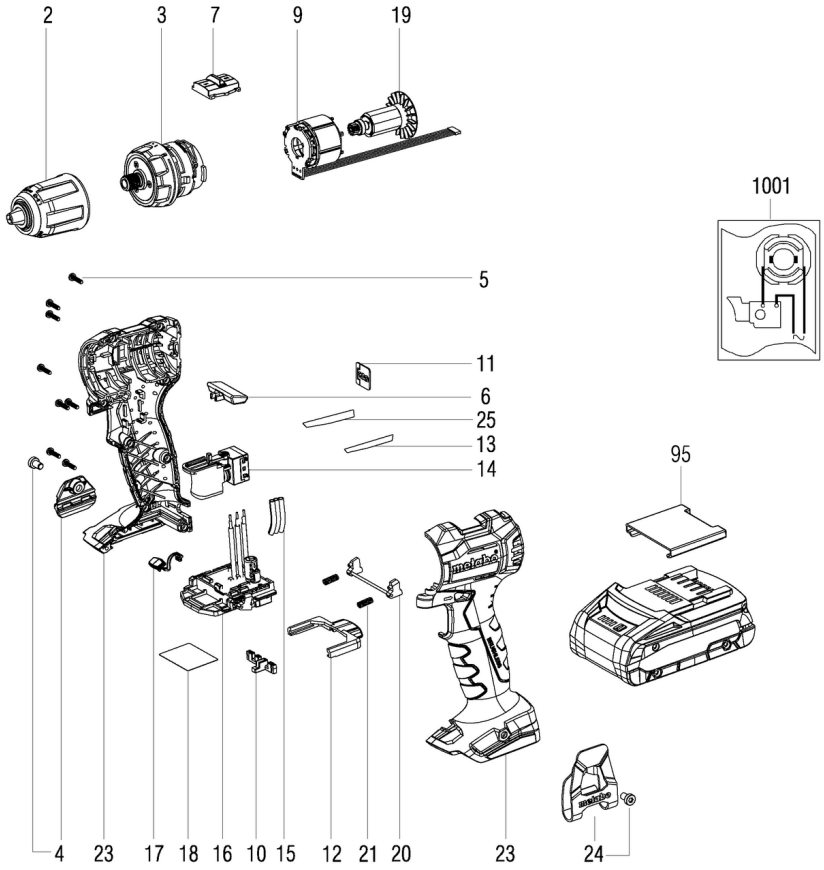
2
3
7
9
19
1001
5
11
6
25
13
14
95
4
23
17
18
16
10
15
12
21
20
23
24

Številka	Znesek	Številka za naročanje	Opis	PG
2	1	301003550	quick change chuck,13 mm	29
3	1	316078370	Gear-box cpl.	31
4	1	343448690	bit-depot 18 V	13
5	8	341704710	Screw,ST2,9x13	11
6	1	343454900	Switch slide (R/L)	11
7	1	316097270	Switch slide H-L compl.	13
9	1	311013910	Stator compl.	27
10	1	343447010	Insert	11
11	1	338129960	Indication label, CAS	12
12	1	343447510	Locking slide	11
13	1	338137450	Type label left 13158 SB 18 L BL Q	12
14	1	343413130	DC switch, complete	20
15	3	339041310	insulating hose	11
16	1	343093310	Electronic unit	37
17	1	316066840	led-module	18
18	1	338081290	Rating Plate 13158000 SB 18 L BL Q	12
19	1	310013960	Armature compl.	30
20	1	316066720	Latch compl.	14
21	2	342004180	Pressure spring	11
23	1	316079940	housing w. cover	25
24	1	339137270	Hook	13
25	1	338139230	Type label right 13158 SB 18 L BL Q	12
95	1	343439680	Cover cap	11
1001	1	338506870	Wiring diagram	