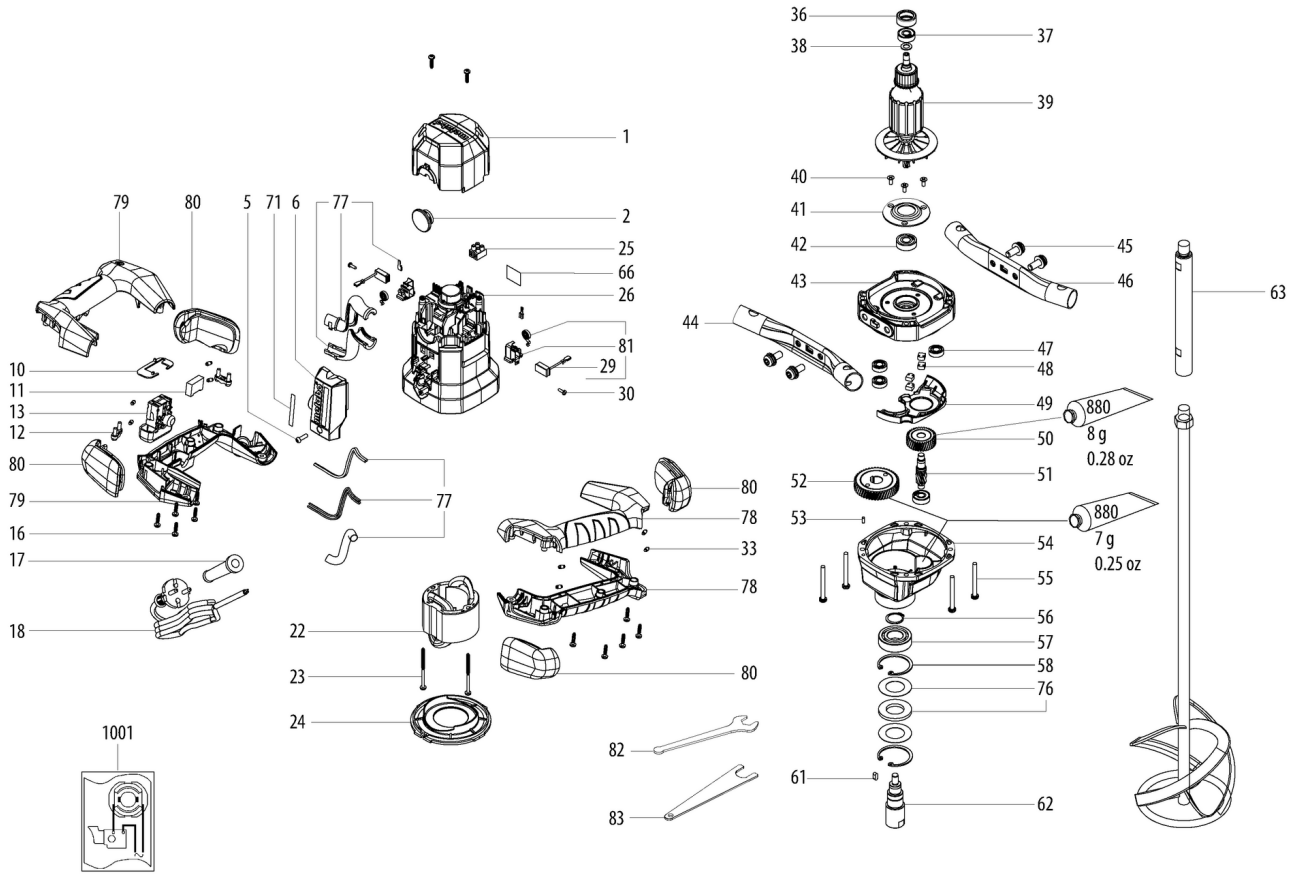
1
2
25
66
26
81
29
30
79
80
5
71
6
77
10
11
13
12
80
79
16
17
18
77
22
23
24
1001
80
78
33
78
80
82
83
36
38
37
39
40
41
42
43
44
45
46
63
47
48
49
50
51
52
53
54
55
56
57
58
76
61
62
880
8 g
0.28 oz
880
7 g
0.25 oz

Številka	Znesek	Številka za naročanje	Opis	PG
1	1	343412940	Top cover	16
2	1	343458350	plate / cover	11
5	1	141119100	Cap screw	12
6	1	343412960	Housing cover	12
10	1	339149820	Retaining sheet	11
11	1	343255370	Condenser	11
12	2	343458590	CABLE CLAMP	11
13	1	343413060	Switch	28
16	12	141124210	Fillister head screw	11
17	1	344104420	Cord sleeve	11
18	1	344533860	Cable with plug	22
22	1	311014300	Field coil compl.	29
23	2	341724030	Screw	11
24	1	339153240	Baffle\010170	11
25	2	343050440	Cable terminal	11
26	1	343412990	Motor housing	21
29	1	343013740	Carbon brush set	15
30	2	341724040	Screw	11
33	8	344104430	Rubber plug	11
36	1	344104440	Rubber bushing	11
37	2	143116080	Ball bearing, 8X 22X 7	16
38	1	339008500	Washer	11
39	1	310014440	Rotor compl.	31
40	3	341705590	Tight-fit screw	11
41	1	339149830	Bearing cover	11
42	1	143111120	Ball bearing, 10x26x8	25
43	1	315203440	Gear flange	27
44	1	339146000	Bracket□front□	20
45	4	341724060	Screw	11
46	1	339146010	Bracket□back□	20
47	3	320051230	Ball bearing	15
48	4	344070760	Felt	11
49	1	343458330	Oil baffle plate	11
50	1	340005000	Gear wheel	16
51	1	341214000	Drive shaft	18
52	1	340009950	Gear wheel	20
53	1	341520130	Pin	11
54	1	315203460	Gear box\010170	25
55	4	341724080	Screw	11
56	1	342024680	sealing ring	11
57	1	7100016995	DEEP GROOVE BALL BEARING	22
58	2	342024690	sealing ring	11
61	1	341164510	Slide block	11
62	1	341606060	Spindle	20
63	1	341606210	Extension pole 200mm	24
66	1	338078820	Rating plate	12
71	1	338135190	type label	12
76	1	316074970	Gasket compl.	11
77	1	344533900	Cable with guide compl	19
78	1	343458630	Handle right	21
79	1	343458640	Handle cover left	21
80	1	316074940	Buffer cpl.	22

Številka	Znesek	Številka za naročanje	Opis	PG
81	1	316074920	Brush holder compl.	18
82	1	344164780	Open-end spanner SW19	14
83	1	344164790	Open-end spanner SW22	14
880	1	344130940	Tube Grease	19
1001	1	338506890	Wiring diagram, RWE 1200	