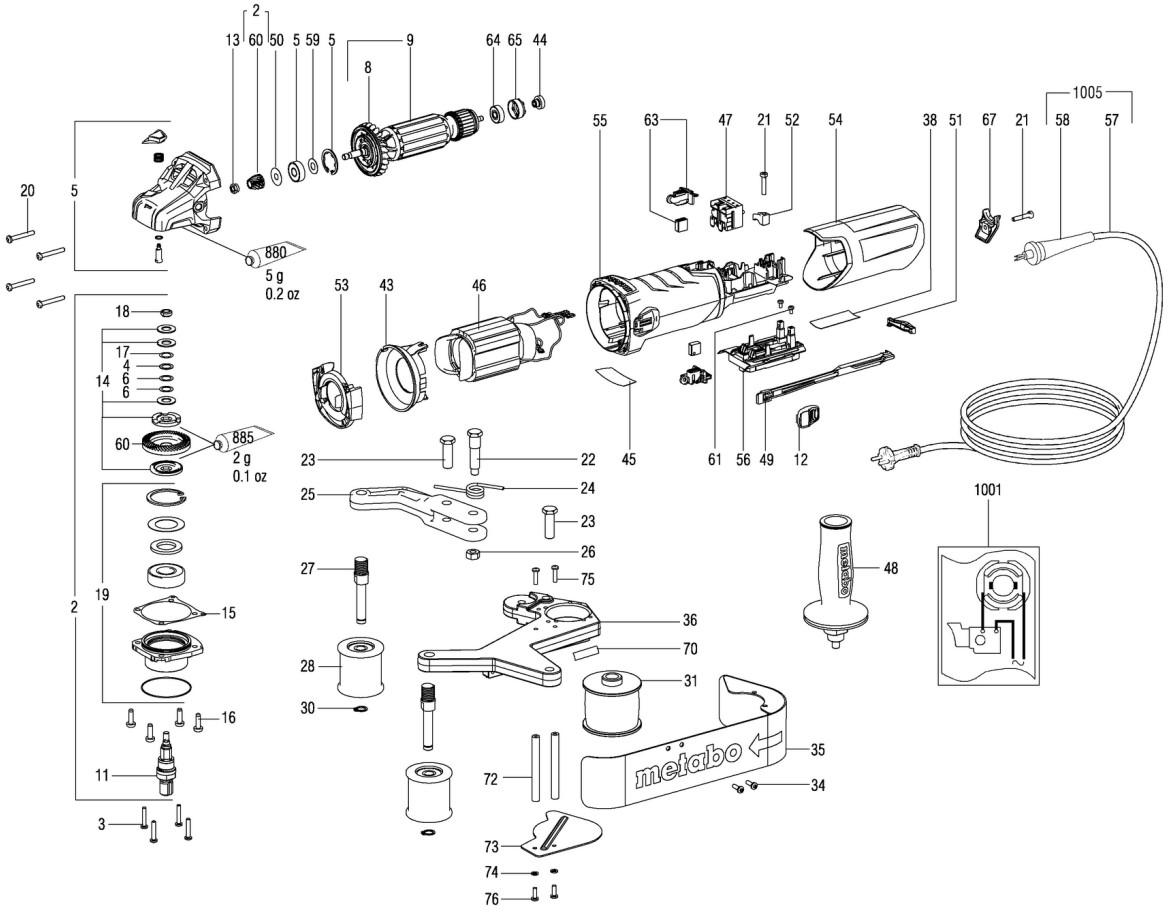
2
13 60 50 5 59 5
9
8
64 65 44
1005
55 63 47 21 52 54 38 51 67 21 58 57
20 5
880
5 g
0.2 oz
53 43 46
18
17
4
6
6
14
60
885
2 g
0.1 oz
23 22 45 61 56 49 12
25 24
23
26
27 75
1001
48
2 19 15
36
70
28
31
30
16
35
11
72
34
3
73
74
76

Številka	Znesek	Številka za naročanje	Opis	PG
2	1	316064080	Safety clutch compl.,M14	41
3	4	141111410	Fillister head screw	11
4	1	141153920	Washer 10,2 X 14,8X 0,5	11
5	1	316064710	Gear housing compl.	30
6	2	141151120	Washer 10,2 X 14,8X 0,2	11
8	1	316054850	Fan w. dust guard	15
9	1	310010990	Armature compl., 230V	36
11	1	341604420	Spindle M14	23
12	1	343437100	Switch slide	11
13	1	341100940	Hexagon nut w.recess	12
14	1	316055080	Friction washer set compl.	23
15	2	339011970	Gasket	11
16	4	141121640	Fill. head screw(DIN 7985)	11
17	1	141152300	Washer 10,2 X 14,8X 0,1	12
18	1	341102460	Nut	13
19	1	316063420	Bearing flange pre-assembled	30
20	4	141116980	Self-tap. fill. h. screw	11
21	2	141117060	Self-tap. fill. h. screw	12
22	1	341515490	Bearing bolt	19
23	2	341515480	Bolt	21
24	1	342022230	Spring clip	14
25	1	315417440	Swivel arm	34
26	1	141131010	Hexagonal nut	11
27	2	341059450	Shaft	28
28	2	316047040	Guide roller compl.	29
30	2	141180040	Retaining ring	11
31	1	341201060	Driving roller	32
34	2	141119860	Fillister head screw	12
35	1	339205270	Push-fit protective plate	26
36	1	315417430	Base plate	37
38	1	399999990	Part not needed	
43	1	339151180	Baffle	11
44	1	343433060	Tacho disc	13
45	1	338066990	Rating plate	11
46	1	311012180	Field coil w.field coil,230 V	33
47	1	343410290	Switch 2-pole	21
48	1	316046590	Side support handle compl.	20
49	1	343433070	Switch rod	11
50	1	339006390	Washer,7,05x19,5x0,2	11
51	1	343433090	Pivoting switch	11
52	1	343362490	Cable clip	12
53	1	339151200	Baffle	11
54	1	343433030	Cap	15
55	1	315013520	Motor housing 2 part	21
56	1	343082890	Electronic unit,230V 50/60Hz	32
57	1	399999990	Part not needed	
58	1	399999990	Part not needed	
59	1	339133060	Washer,8,05x17x0,4	11
60	1	316055690	Bevel gear w.pinion	29
61	2	141121430	Fill. head screw(DIN 7985)	11
63	1	316067170	carbonbrush with brusholder Set 230V	27
64	1	143115690	Ball bearing,6x19x6	13

Številka	Znesek	Številka za naročanje	Opis	PG
65	1	344097870	Rubber bushing	11
67	1	343433100	End cap	11
72	2	341007060	spacer sleeve	20
73	1	339139460	Protection plate	31
74	2	141150260	Spring washer	11
75	2	141119870	Fillister head screw	11
76	2	141119860	Fillister head screw	12
880	1	344130920	Grease 100G	31
885	1	344130560	Grease SF 011 50Gr 1,8oz	33
1001	1	338505780	Diagram	
1005	1	316067320	Cable with sleeve	27