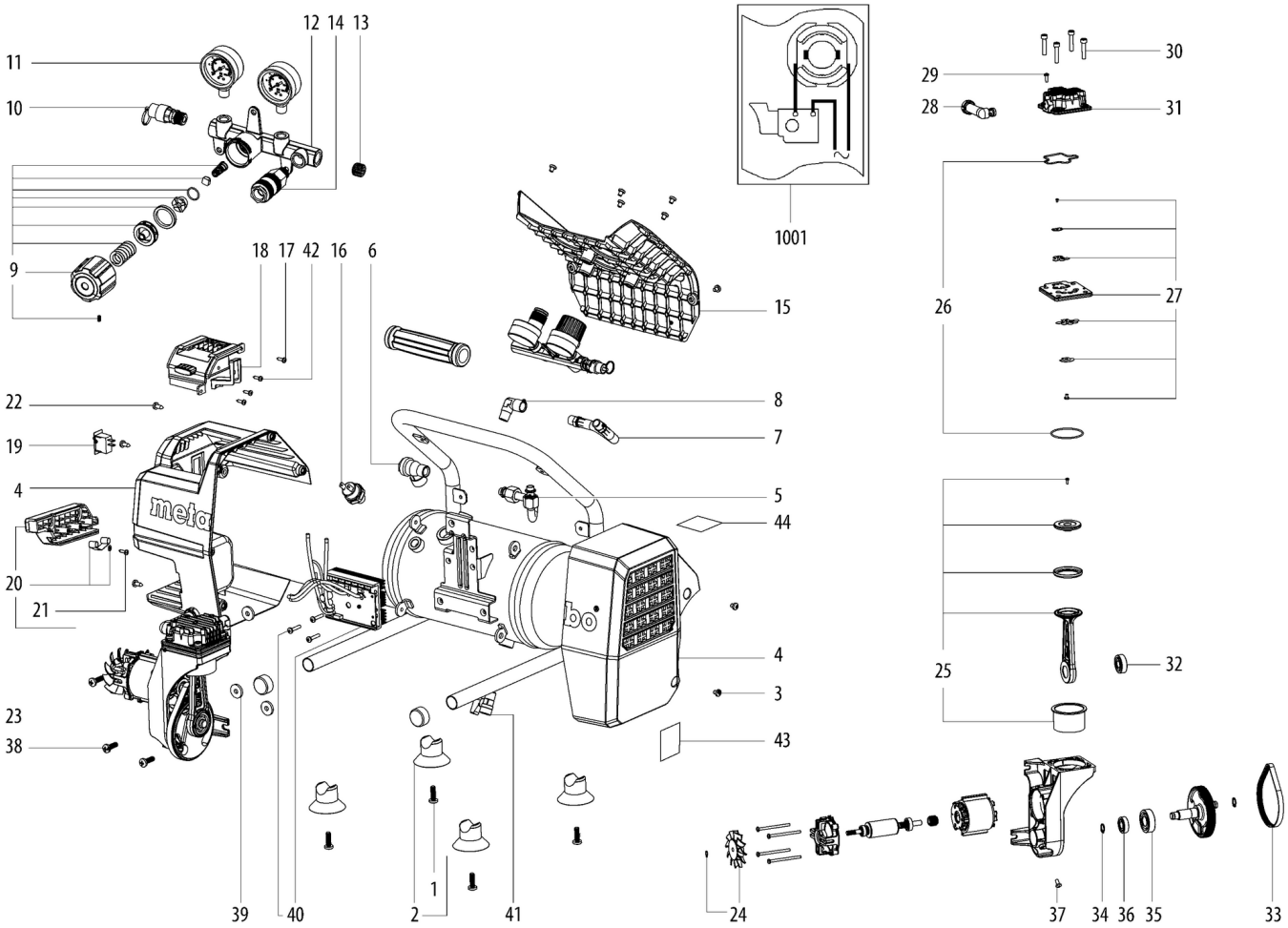
12 14 13
11
10
9
18 17 42 16 6
22
19
4
20
21
23
38
39
40
2
1
41
15
8
7
5
44
4
3
43
1001
30
29
28
31
26
27
25
32
24
37
34 36 35
33

Številka	Znesek	Številka za naročanje	Opis	PG
1	4	141123850	Flat headed screw	13
2	4	344114560	Rubber foot	15
3	11	341723510	flower type screw	15
4	1	316098460	Covering hood compl	29
5	1	315420440	PRESSURE LINE	17
6	1	341167210	CHECK VALV	21
7	1	344114570	PRESSURE HOSE	20
8	1	7872663082	ANGLE BRACKET 1/4"AX1/4"I ET	20
9	1	316098470	PRESSURE REGULATOR cpl.	22
10	1	341164650	SAFETY VALVE 1/4"A/8 BAR ET	20
11	2	341167190	Manometer	24
12	1	341167200	AUTOM. PRESSURE CONTROL SWITCH	23
13	1	341165470	Plug,1/4"	11
14	1	341165480	Clutch	21
15	1	343449670	Cover cpl.	21
16	1	343412260	Switch	21
17	3	341704610	Fillister head screw	11
18	1	343449680	Holder	12
19	1	343412270	Switch	16
20	1	316098480	Retaining rail cpl.	15
21	4	341704710	Screw,ST2,9x13	11
22	5	341723520	flower type screw	13
23	1	316098490	PUMP ASSEMBLY	48
24	1	316098500	Fan compl.	12
25	1	316098510	Piston compl.	27
26	1	316098520	Gasket compl.	12
27	2	316098530	VALVE PLATE ASSEMBLY	25
28	1	343449690	air filter	14
29	1	141113040	Fillister head screw	11
30	4	141113900	Cap screw	12
31	1	315420460	CYLINDER HEAD	20
32	1	143110400	Ball bearing, 12x32x10	25
33	1	344260430	Synchronous Belt	28
34	2	141180060	RETAINING RING	11
35	1	143114460	Ball bearing	19
36	1	143111440	Ball bearing, 12x28x8	27
37	1	141110590	Fillister head screw	11
38	3	141113080	Fillister head screw	11
39	3	344260440	Slider Rubber Bumper	12
40	1	343087580	PCB ASS'Y	48
41	1	341164800	DRAIN VALVE	18
42	1	341723540	flower type screw	11
43	1	338071840	Rating plate	12
44	1	338130910	Indication label	13
1001	1	338510340	Wiring diagram	