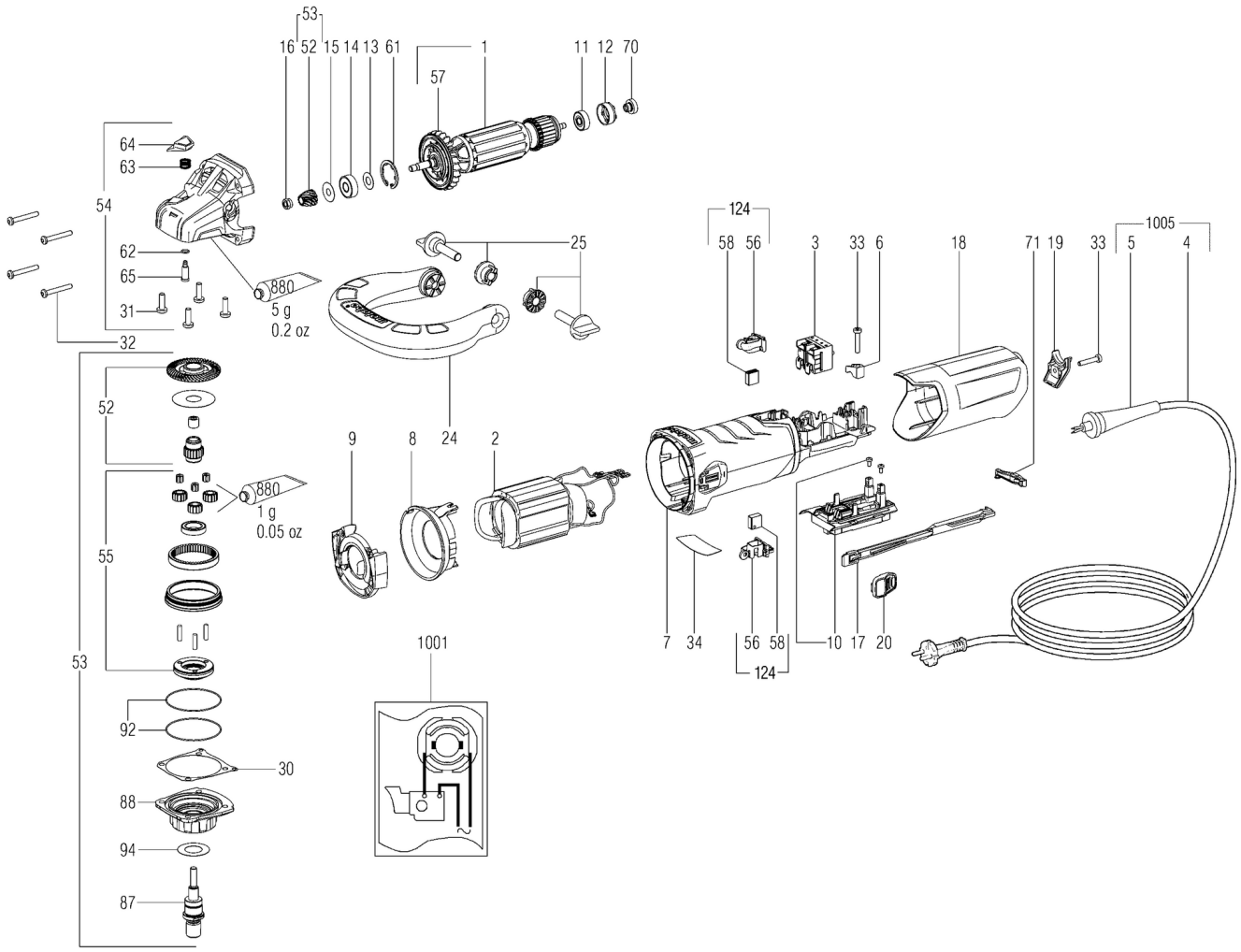
53
16 52 15 14 13 61
1
11 12 70
57
64
63
54
62
65
31
880
5 g
0.2 oz
32
25
52
9 8 24 2
880
1 g
0.05 oz
55
53
92
30
88
94
87
1001
124
58 56
3
33 6
18
71 19
33
1005
5
4
7 34
56 58
124
10 17 20

Številka	Znesek	Številka za naročanje	Opis	PG
1	1	310010990	Armature compl., 230V	36
2	1	311012180	Field coil w.field coil,230 V	33
3	1	343410120	Switch 2-pole	21
4	1	399999990	Part not needed	
5	1	399999990	Part not needed	
6	1	343362490	Cable clip	12
7	1	315013520	Motor housing 2 part	21
8	1	339151180	Baffle	11
9	1	339151200	Baffle	11
10	1	343082890	Electronic unit,230V 50/60Hz	32
11	1	143115690	Ball bearing,6x19x6	13
12	1	344097870	Rubber bushing	11
13	1	339133060	Washer,8,05x17x0,4	11
14	1	143115700	Ball bearing,8x22x7	14
15	1	339006390	Washer,7,05x19,5x0,2	11
16	1	341100940	Hexagon nut w.recess	12
17	1	343433070	Switch rod	11
18	1	343433030	Cap	15
19	1	343433100	End cap	11
20	1	343437100	Switch slide	11
24	1	343399690	Loop handle compl.	26
25	1	316067100	Fixing set	23
30	1	339012430	Gasket	11
31	4	141121640	Fill. head screw(DIN 7985)	11
32	4	141116980	Self-tap. fill. h. screw	11
33	2	141117060	Self-tap. fill. h. screw	12
34	1	338068660	Rating plate	11
52	1	316066140	Bevel gear w.pinion	35
53	1	316066180	Gear flange compl.	50
54	1	316066890	Gear housing compl.	33
55	1	316066110	Planet wheel set, compl.	36
56	1	316065420	Brush holder set	23
57	1	316054850	Fan w. dust guard	15
58	1	316065450	Carbon brush set cut-off	22
61	1	141156650	Retaining ring	11
63	1	342003390	Pressure spring	11
64	1	343433640	Push button	11
65	1	316083490	bolt compl.	16
70	1	343433060	Tacho disc	13
71	1	343433090	Pivoting switch	11
87	1	341605360	Spindle shaft	24
88	1	316066120	Flange compl.	29
92	2	143195320	O-ring	11
94	1	339008020	Washer	12
124	1	316067170	carbonbrush with brusholder Set 230V	27
880	1	344130920	Grease 100G	31
1001	1	338505780	Diagram	
1005	1	316067320	Cable with sleeve	27