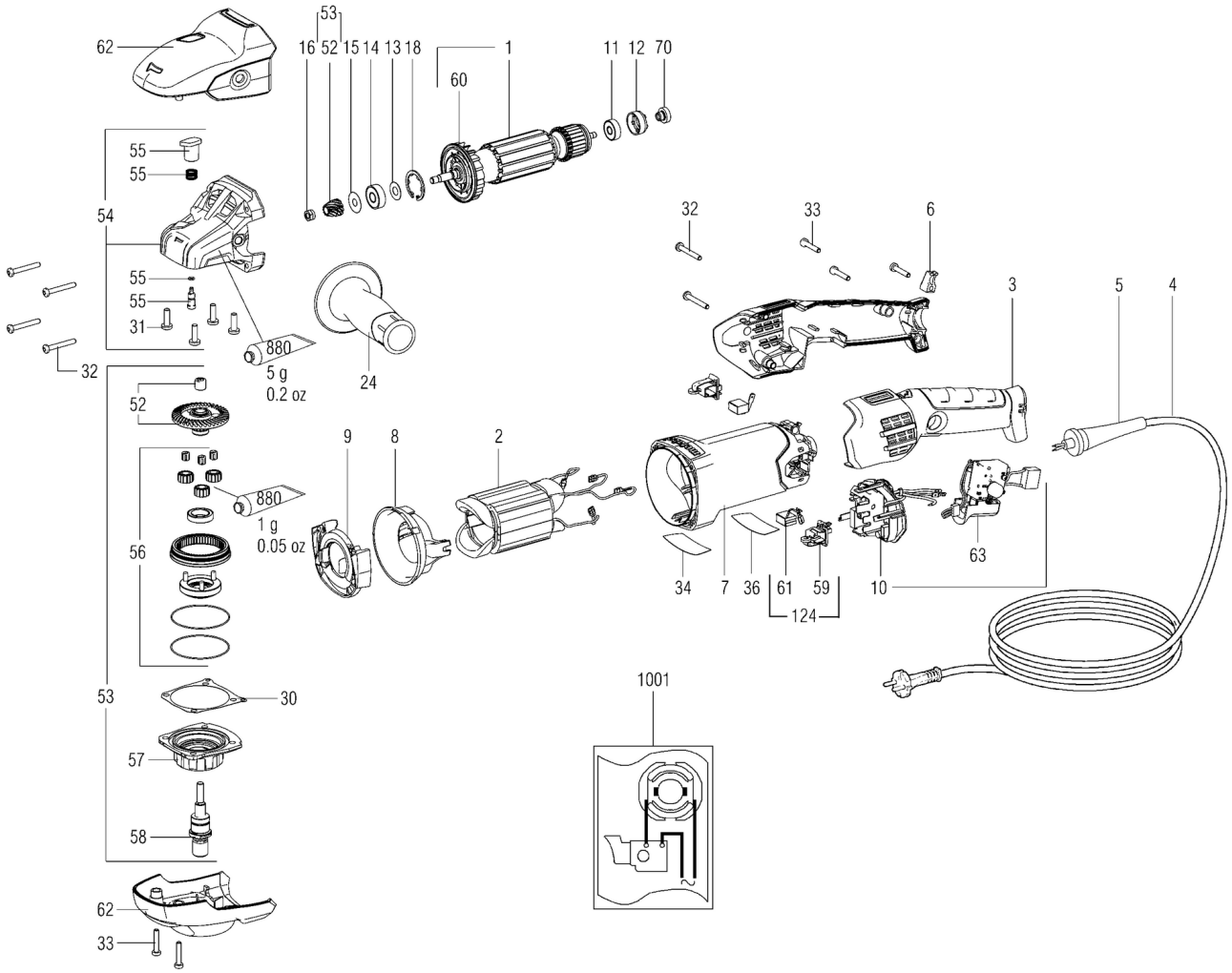
62
53
16 52 15 14 13 18
1
60
11 12 70
55
55
54
55
55
31
880
5 g
0.2 oz
24
32
52
880
1 g
0.05 oz
56
53
30
57
58
62
33
9
8
2
32
33
6
3
5
4
34
7
36
61
59
124
10
63
1001

Številka	Znesek	Številka za naročanje	Opis	PG
1	1	310012380	Armature compl. 230V	40
2	1	311013060	Field coil assembly w. field coil 230V	36
3	1	316076130	Handle 2 part	25
4	1	344531160	Cable w.CEE plug	28
5	1	344100970	Cable sleeve	12
6	1	343362490	Cable clip	12
7	1	315013790	Motor housing	21
8	1	339151180	Baffle	11
9	1	339151200	Baffle	11
10	1	316064720	Electronic unit w.switch	34
11	1	143115690	Ball bearing,6x19x6	13
12	1	344097870	Rubber bushing	11
13	1	339133060	Washer,8,05x17x0,4	11
14	1	143115700	Ball bearing,8x22x7	14
15	1	339006390	Washer,7,05x19,5x0,2	11
16	1	341100940	Hexagon nut w.recess	12
18	1	141156650	Retaining ring	11
24	1	314000540	Handle cpl.	22
30	1	339012430	Gasket	11
31	4	141121640	Fill. head screw(DIN 7985)	11
32	6	141116980	Self-tap. fill. h. screw	11
33	5	141117060	Self-tap. fill. h. screw	12
34	1	338068640	Rating plate	11
36	1	399999990	Part not needed	
52	1	316067720	Bevel gear w.pinion	32
53	1	316067730	Gear flange compl.	49
54	1	316066100	Gear housing compl.	30
55	1	316066210	Push button compl.	22
56	1	316067830	Planet wheel set, compl.	37
57	1	316066120	Flange compl.	29
58	1	341605360	Spindle shaft	24
59	1	316065420	Brush holder set	23
60	1	330002330	Fan	14
61	1	316065450	Carbon brush set cut-off	22
62	1	316066090	Cover compl.	25
63	1	343411330	Poti switch without dial	23
70	1	343433060	Tacho disc	13
124	1	316067170	carbonbrush with brusholder Set 230V	27
880	1	344131380	Grease 100G	31
1001	1	338506280	Diagram	