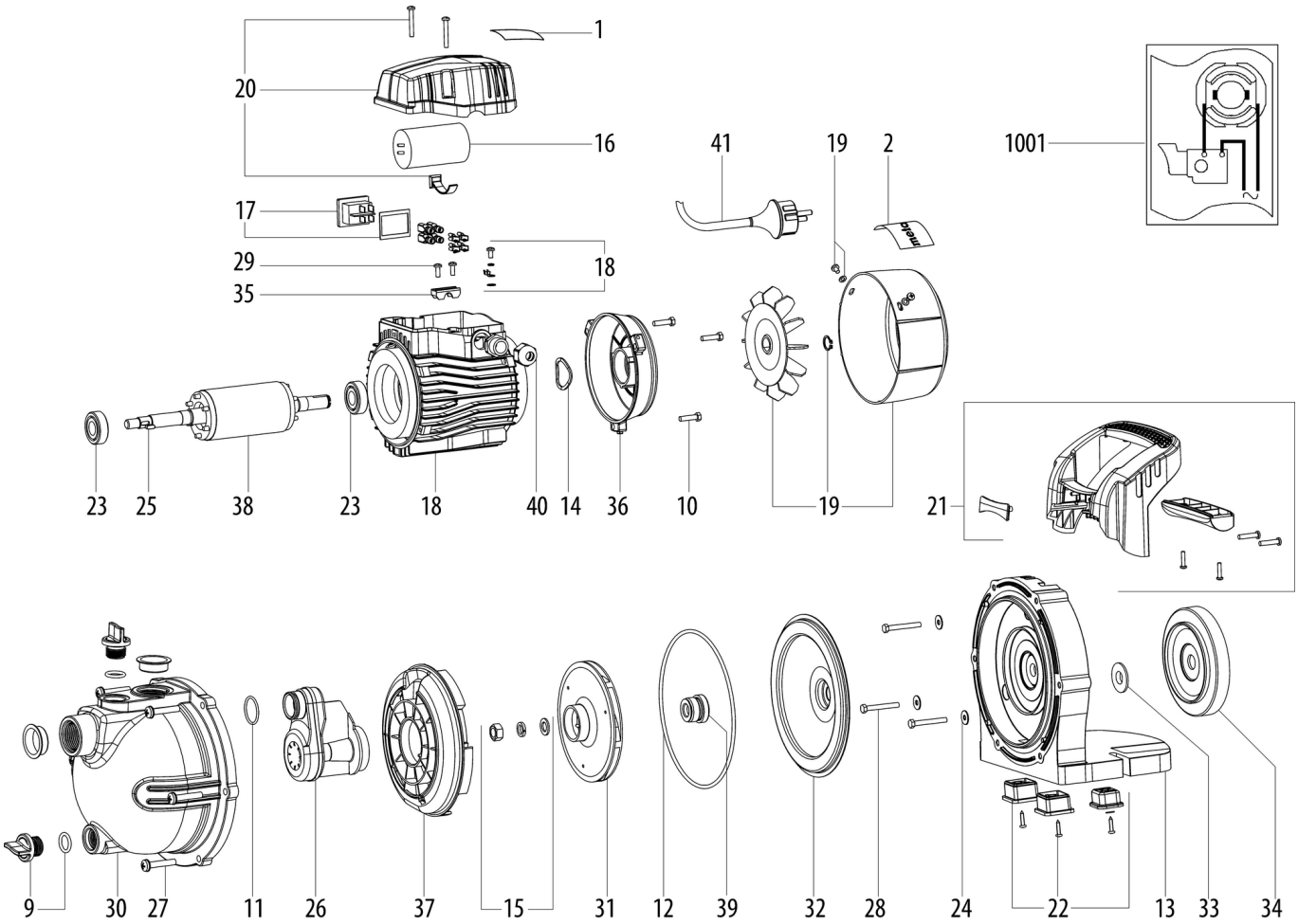
1
20
16
41
19
2
1001
17
18
29
35
23
25
38
23
18
40
14
36
10
19
21
9
30
27
11
26
37
15
31
12
39
32
28
24
22
13
33
34

Številka	Znesek	Številka za naročanje	Opis	PG
1	1	338061110	Rating plate	11
2	1	338124660	Metabo-Typenschild, P 3300 G, 00963	11
9	2	341705140	THREADED PLUG 1/2"	11
10	3	141115940	Hexagon head screw	11
11	1	143195540	O-ring	11
12	1	143195550	O-ring	12
13	1	315418470	MOTOR BASE	24
14	1	316056160	wave spring	11
15	1	316057110	clamp kit cpl. (impeller)	11
16	1	316057170	Condenser compl. 16µF/450 V	19
17	1	316057180	Switch compl.	15
18	1	316057240	Stator compl.	37
19	1	316057300	Fan compl.	14
20	1	316097660	Cover cpl.	15
21	1	316057370	Handle compl.	19
22	1	316057390	Foot compl.	14
23	2	320050840	Ball bearing	15
24	3	339006950	Washer	11
25	1	341161690	Slide block	11
26	1	341161740	Tube	17
27	6	341705060	Screw	11
28	3	341705070	Hexagon head screw	11
29	2	341705150	Screw self-tapping	11
30	1	343435640	Pump housing	33
31	1	343435650	Wheel	19
32	1	343435660	Cover	20
33	1	343435670	Sealing washer	11
34	1	343435680	Face plate	17
35	1	343436720	Cable clip	11
36	1	343436800	Plate	25
37	1	343436820	DIFFUSOR	15
38	1	343436850	ARMATURE	25
39	1	344099680	Gasket	13
40	1	344099850	Cable sleeve	11
41	1	344499810	Cable	21
1001	1	338505870	Verdrahtungsplan	