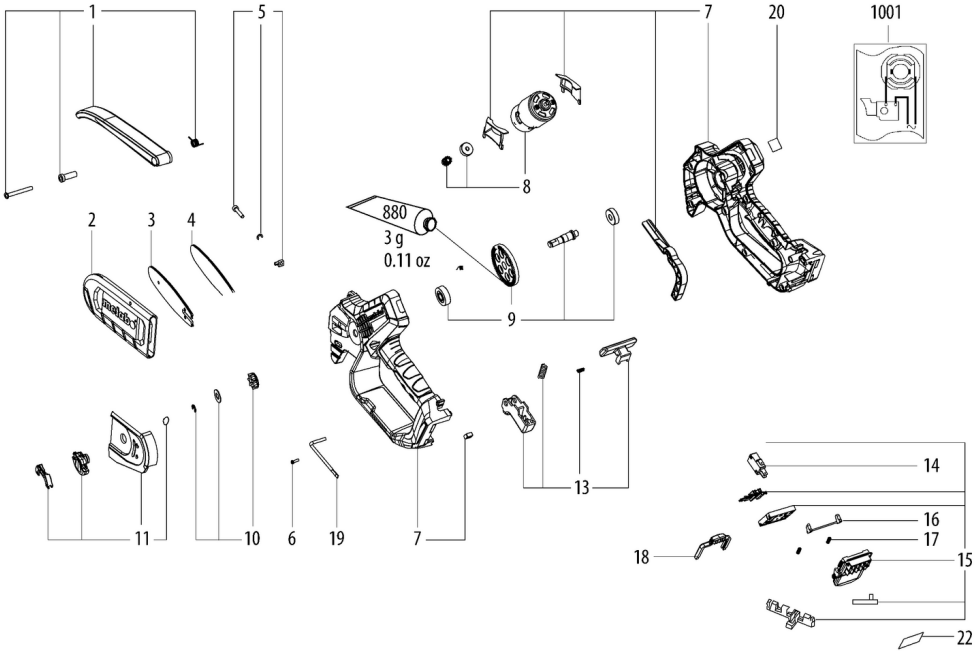
1
5
7
20
1001
8
2
3
4
880
3 g
0.11 oz
9
13
14
16
17
18
15
22
11
10
6
19
7

Številka	Znesek	Številka za naročanje	Opis	PG
1	1	316079780	Wheel guard compl.	18
2	1	343461780	Chain guard	12
3	1	628712000	Saw rail 15 cm	
4	1	628713000	Saw chain 15 cm (1/4" LP / 1.1 mm)	
5	1	316079790	CHAIN TENSIONER cpl.	14
6	12	341704850	Screw,ST 4,2x15 TX20	11
7	1	316079800	Housing compl.	31
8	1	316079810	Motor compl.	33
9	1	316079820	Bevel gear compl.	25
10	1	316079830	Chain sprocket cpl.	13
11	1	316079840	Cover f. Chain sprocket compl.	18
13	1	316079850	Trigger cap cpl.	13
14	1	343413350	on/off switch	17
15	1	316079860	Electronic cpl.	35
16	1	316066720	Latch compl.	14
17	2	342004180	Pressure spring	11
18	1	343461830	Release button	12
19	1	344199570	Screwdriver	13
20	1	338129960	Indication label, CAS	12
22	1	338081500	Rating plate 00856000 MS 18 LTX 15	12
95	1	343439680	Cover cap	11
880	1	344130970	Grease 50Gr 1,8oz	22
1001	1	338511220	Diagram	