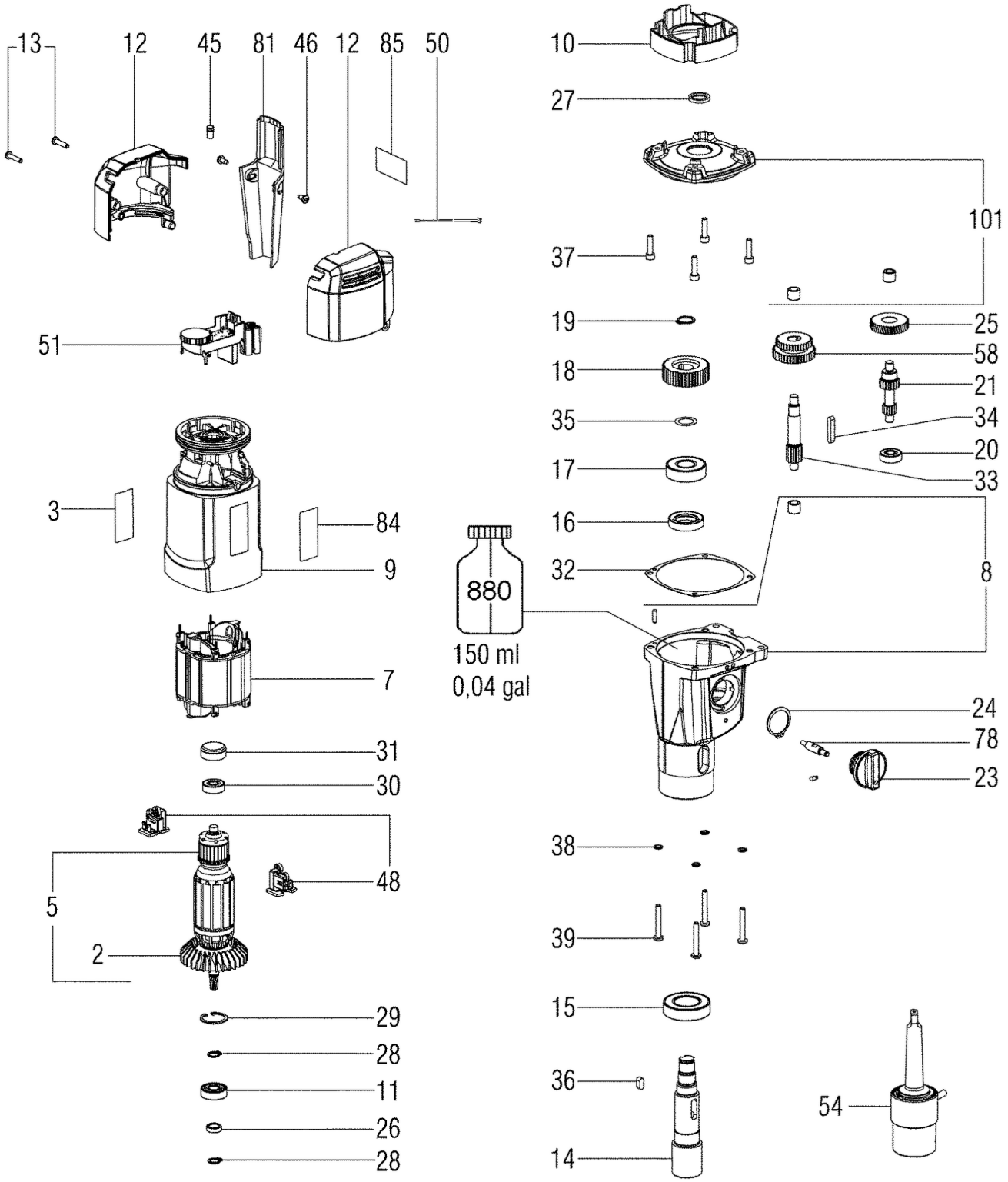
13
12
45
81
46
12
85
50
51
3
84
9
7
31
30
48
5
2
29
28
11
26
28
10
27
101
37
19
25
58
18
21
35
34
20
17
33
16
8
32
880
150 ml
0,04 gal
24
78
23
38
39
15
36
14
54

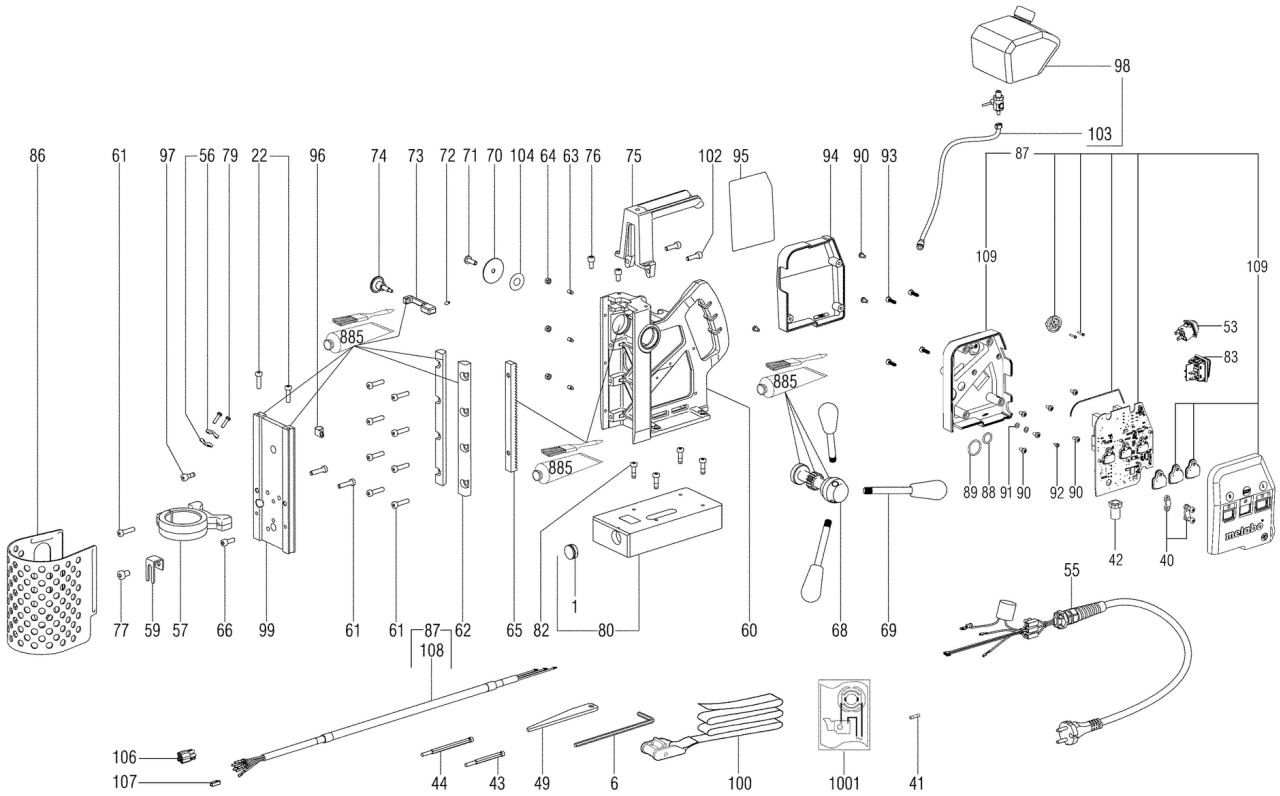
86
61
97
56
79
22
96
74
73
72
71
70
104
64
63
76
75
102
95
94
90
93
98
103
87
109
109
53
83
885
885
885
89
88
91
90
92
90
42
40
55
77
59
57
66
99
61
61
87
108
62
65
82
1
80
60
68
69
106
107
44
43
49
6
100
1001
41

Številka	Znesek	Številka za naročanje	Opis	PG
1	1	343083660	LED	30
2	1	316032610	Fan w. prot. Grid	21
3	1	338053390	Rating plate	11
5	1	310009660	Armature compl.,230 V	42
6	1	344163620	Cranked wrench key	20
7	1	311011140	Field w.coil	34
8	1	316052360	Gear housing compl.	48
9	1	315012780	Motor housing	25
10	1	339150970	Baffle	18
11	1	143111120	Ball bearing, 10x26x8	25
12	1	343398690	Motor cap 2-part	23
13	2	141116020	Self-tap fill h screw	12
14	1	341604120	Spindle	44
15	1	143115150	Grooved ball bearing	22
16	1	143195290	Shaft sealing ring	25
17	1	143115240	Ball bearing,17X 40X 12	18
18	1	340004120	Spur gear	33
19	1	141180090	snap ring	12
20	1	143115800	Ball bearing, 8x22x7	13
21	1	340004130	Pinion shaft	41
22	2	141113880	Cap screw	11
23	1	316052800	Control knob compl.	28
24	1	141181650	Retaining ring	11
25	1	340012660	Spur gear	35
26	1	341005780	Bush	24
27	1	143195170	Shaft sealing ring	23
28	2	141180040	Retaining ring	11
29	1	141180350	Retaining ring	12
30	1	143115800	Ball bearing, 8x22x7	13
31	1	344096020	Rubber bearing	12
32	1	339011840	Gasket	13
33	1	340004140	Pinion shaft	38
34	1	141154910	PRALLEL KEY	11
35	1	141156450	Shim	11
36	1	141131980	Parallel key	11
37	4	141113700	Cap screw	12
38	4	339210910	Gasket	11
39	4	141120560	Self-tap. fill. h. screw	11
40	1	341147980	STRESS RELIEVE	20
41	1	142110180	Fuse	11
42	1	344099280	Cable sleeve	13
43	1	626608000	Centring pin for HPHSS short	
44	1	626609000	Centring pin for HPHSS long and HM	
45	1	343398570	Light transmission	15
46	2	141116130	Self-tap. fill. h. screw	11
48	2	316047020	Brush Holder ass'y	22
49	1	642395000	Drift key MK 1 and 2	
50	1	343077490	Temperature sensor	21
51	1	343082020	Electronic unit,230V 50/60Hz	36
53	1	343409890	Press button	19
54	1	316046240	Industrial arbors,MK2	61
55	1	344499090	Cable compl.,230 V	36

Številka	Znesek	Številka za naročanje	Opis	PG
56	2	343398970	Cable clip	11
57	1	315417510	Gear holder	26
58	1	340004150	Sliding block	46
59	1	339135780	Holder	14
60	1	316051550	Drill Frame	49
61	11	141117050	Cap screw	11
62	2	341148240	Guide strip	35
63	3	141123910	Grub screw	11
64	3	141130090	Hexagonal nut	11
65	1	341148220	Rack	30
66	1	141113850	Cap screw	12
68	1	340004290	Gear-wheel shaft	32
69	3	314001370	Handle compl.	18
70	1	141156530	Washer	11
71	1	141113080	Fillister head screw	11
72	1	342001140	Index bolt	12
73	1	341148250	Latch	19
74	1	341148260	Knob	12
75	1	314001360	Side support handle	29
76	2	141113840	Cap screw	12
77	1	141123020	Cap screw	11
78	1	341210300	Shift bolt	22
79	2	141122790	Fillister head screw	11
80	1	341148490	Magnet block	61
81	1	343398700	Cabel-duct	19
82	4	341704970	Cap screw	11
83	1	343409860	Switch	23
84	1	338122160	M-Label,08 52x22	11
85	1	338122350	Indication lable	11
86	1	339135910	Metal shavings	26
87	1	316053630	Electronic compl.	59
88	1	143194810	O-ring	11
89	1	143192410	O-ring	11
90	9	141119850	Fillister head screw	11
91	2	141150410	Serrated lock washer	12
92	1	141122210	Fillister head screw	11
93	4	141116800	Self-tap. fill. h. screw	11
94	1	343432310	cable cover	19
95	1	338123760	Indication label	13
96	1	339136140	Cable clip	11
97	1	341705040	Cap screw	11
98	1	316048530	cooling liquid tank compl.	35
99	1	316052040	Sliding carriage compl.	41
100	1	341148140	tension belt	32
101	1	316053940	Gear cover compl.	31
102	2	141113870	Cap screw	12
103	1	316050840	hose compl.	26
104	1	141152590	Washer	12
106	1	142110200	Bushing 6-pole	16
107	1	142110190	Bushing 1-pole	11
108	1	316051180	Cable harness	35
109	1	316066390	Housing compl.	33

Številka	Znesek	Številka za naročanje	Opis	PG
880	1	344131190	Oil	41
885	1	344130990	Grease 50Gr 1,8oz	28
1001	1	338505620	Wiring diagram	