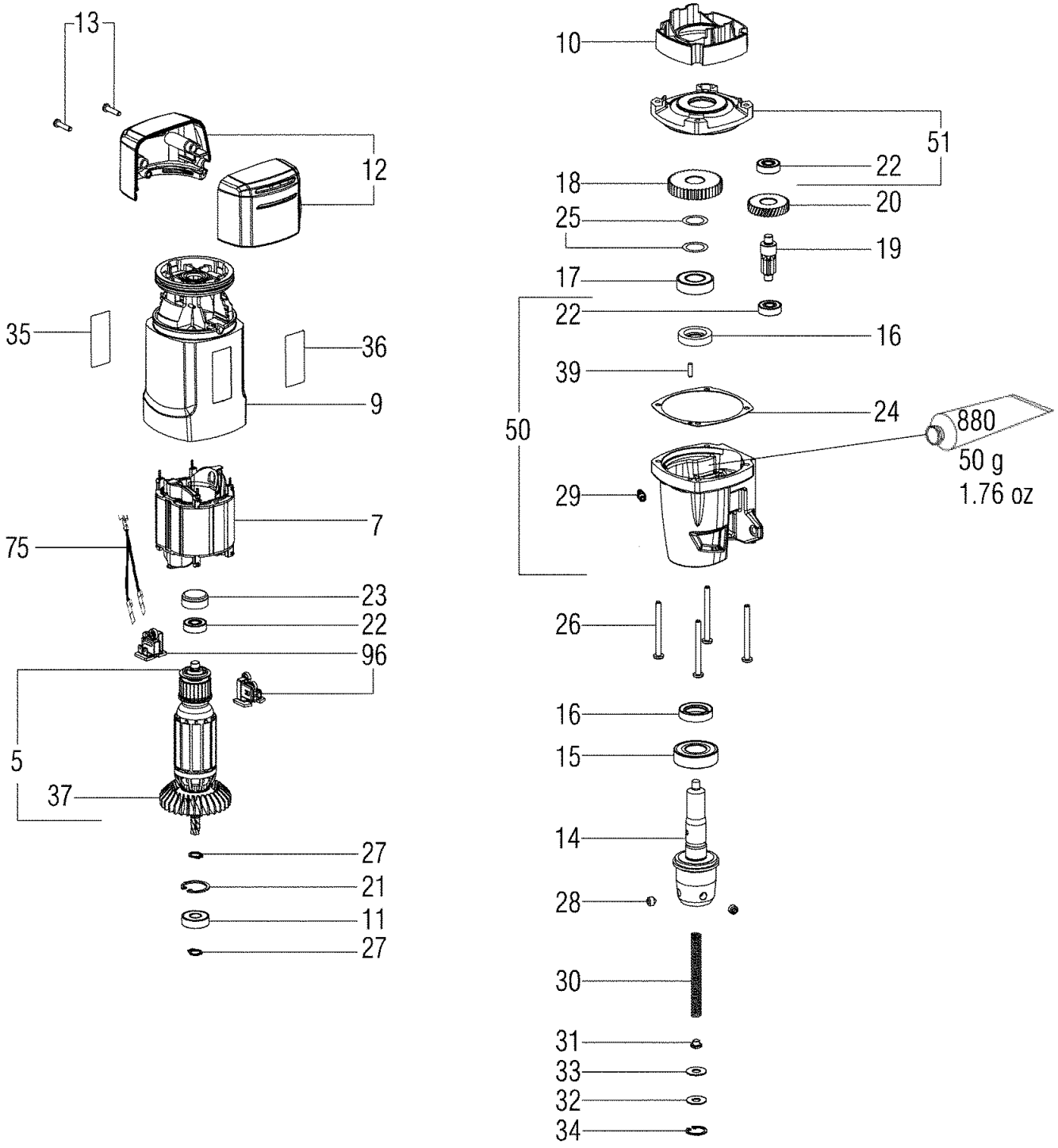
13
12
35
36
9
7
75
23
22
96
5
37
27
21
11
27
10
51
22
18
20
25
19
17
22
16
39
24
880
50 g
1.76 oz
50
29
26
16
15
14
28
30
31
33
32
34

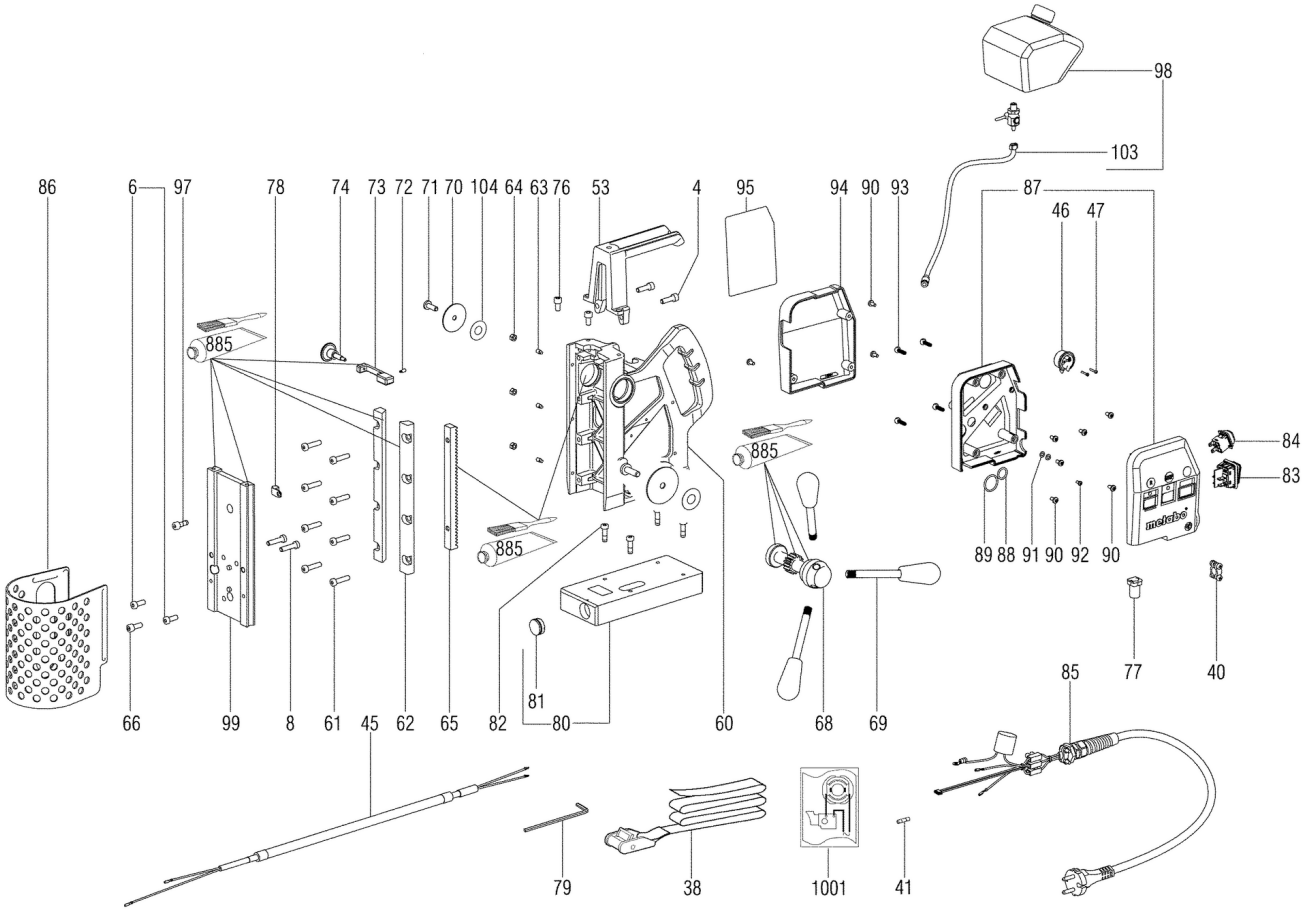
98
103
86
6
97
78
74
73
72
71
70
104
64
63
76
53
4
95
94
90
93
87
46
47
885
885
885
84
83
89
88
91
90
92
90
66
99
8
61
45
62
65
82
81
80
60
68
69
85
77
40
79
38
1001
41

| Številka | Znesek | Številka za naročanje | Opis | PG |
|---|---|---|---|---|
| 4 | 2 | 141113870 | Cap screw | 12 |
| 5 | 1 | 310009650 | Armature compl.,230 V | 40 |
| 6 | 2 | 141122300 | Cap screw | 11 |
| 7 | 1 | 311011160 | Field coil w.field coil,230 V | 34 |
| 8 | 2 | 141117050 | Cap screw | 11 |
| 9 | 1 | 315012780 | Motor housing | 25 |
| 10 | 1 | 339150970 | Baffle | 18 |
| 11 | 1 | 143111120 | Ball bearing, 10x26x8 | 25 |
| 12 | 1 | 343398680 | Motor cap 2-part | 21 |
| 13 | 2 | 141116020 | Self-tap fill h screw | 12 |
| 14 | 1 | 341604110 | Spindle | 47 |
| 15 | 1 | 143112970 | Ball bearing, 20x42x12 | 26 |
| 16 | 2 | 143195280 | Shaft sealing ring | 19 |
| 17 | 1 | 143111450 | Ball bearing, 17x35x10 | 20 |
| 18 | 1 | 340003370 | Spindle wheel | 32 |
| 19 | 1 | 340003380 | Intermediate gear | 32 |
| 20 | 1 | 340012030 | Intermediate gear | 32 |
| 21 | 1 | 141180350 | Retaining ring | 12 |
| 22 | 3 | 143115800 | Ball bearing, 8x22x7 | 13 |
| 23 | 1 | 344096020 | Rubber bearing | 12 |
| 24 | 1 | 339210850 | Gasket | 14 |
| 25 | 2 | 141151330 | Washer | 12 |
| 26 | 4 | 141118810 | Self-tap. fill. h. screw | 11 |
| 27 | 2 | 141180040 | Retaining ring | 11 |
| 28 | 2 | 141115080 | Screw | 11 |
| 29 | 1 | 341210270 | nipple | 23 |
| 30 | 1 | 342003900 | Pressure spring | 11 |
| 31 | 1 | 341059810 | Pressure plate | 19 |
| 32 | 1 | 339007740 | Washer | 11 |
| 33 | 1 | 344099130 | Rubber packing | 11 |
| 34 | 1 | 141180830 | Retaining ring | 12 |
| 35 | 1 | 338053380 | Rating plate | 11 |
| 36 | 1 | 338122160 | M-Label,08 52x22 | 11 |
| 37 | 1 | 316032610 | Fan w. prot. Grid | 21 |
| 38 | 1 | 341148140 | tension belt | 32 |
| 39 | 1 | 141163840 | Cylindrical pin | 13 |
| 40 | 1 | 341147980 | STRESS RELIEVE | 20 |
| 41 | 1 | 142110180 | Fuse | 11 |
| 45 | 1 | 316051560 | Cable harness | 35 |
| 46 | 1 | 343432320 | Cable gland turnable | 13 |
| 47 | 2 | 341703450 | SCREW | 11 |
| 50 | 1 | 316052350 | Gear housing compl. | 50 |
| 51 | 1 | 316046870 | Gear cover compl. | 31 |
| 53 | 1 | 314001360 | Side support handle | 29 |
| 60 | 1 | 316051550 | Drill Frame | 49 |
| 61 | 8 | 141117050 | Cap screw | 11 |
| 62 | 2 | 341148240 | Guide strip | 35 |
| 63 | 3 | 141123910 | Grub screw | 11 |
| 64 | 3 | 141130090 | Hexagonal nut | 11 |
| 65 | 1 | 341148220 | Rack | 30 |
| 66 | 1 | 141113850 | Cap screw | 12 |
| 68 | 1 | 340004290 | Gear-wheel shaft | 32 |

| Številka | Znesek | Številka za naročanje | Opis | PG |
|---|---|---|---|---|
| 69 | 3 | 314001370 | Handle compl. | 18 |
| 70 | 1 | 141156530 | Washer | 11 |
| 71 | 1 | 141113080 | Fillister head screw | 11 |
| 72 | 1 | 342001140 | Index bolt | 12 |
| 73 | 1 | 341148250 | Latch | 19 |
| 74 | 1 | 341148260 | Knob | 12 |
| 75 | 1 | 399999990 | Part not needed | |
| 76 | 2 | 141113840 | Cap screw | 12 |
| 77 | 1 | 344099280 | Cable sleeve | 13 |
| 78 | 1 | 339136150 | Cable clip | 11 |
| 79 | 1 | 344163630 | Cranked wrench key | 20 |
| 80 | 1 | 341148490 | Magnet block | 61 |
| 81 | 1 | 343083660 | LED | 30 |
| 82 | 4 | 341704970 | Cap screw | 11 |
| 83 | 1 | 343409860 | Switch | 23 |
| 84 | 1 | 343409890 | Press button | 19 |
| 85 | 1 | 344499090 | Cable compl.,230 V | 36 |
| 86 | 1 | 339135910 | Metal shavings | 26 |
| 87 | 1 | 316053620 | Electronic compl. | 55 |
| 88 | 1 | 143194810 | O-ring | 11 |
| 89 | 1 | 143192410 | O-ring | 11 |
| 90 | 9 | 141119850 | Fillister head screw | 11 |
| 91 | 2 | 141150410 | Serrated lock washer | 12 |
| 92 | 1 | 141122210 | Fillister head screw | 11 |
| 93 | 4 | 141116800 | Self-tap. fill. h. screw | 11 |
| 94 | 1 | 343432310 | cable cover | 19 |
| 95 | 1 | 338123760 | Indication label | 13 |
| 96 | 2 | 316035910 | Carbon brush compl.cut-off | 24 |
| 97 | 1 | 341705040 | Cap screw | 11 |
| 98 | 1 | 316048530 | cooling liquid tank compl. | 35 |
| 99 | 1 | 316052040 | Sliding carriage compl. | 41 |
| 103 | 1 | 316050840 | hose compl. | 26 |
| 104 | 1 | 141152590 | Washer | 12 |
| 880 | 1 | 344130920 | Grease 100G | 31 |
| 885 | 1 | 344130990 | Grease 50Gr 1,8oz | 28 |
| 1001 | 1 | 338505630 | Wiring diagram | |