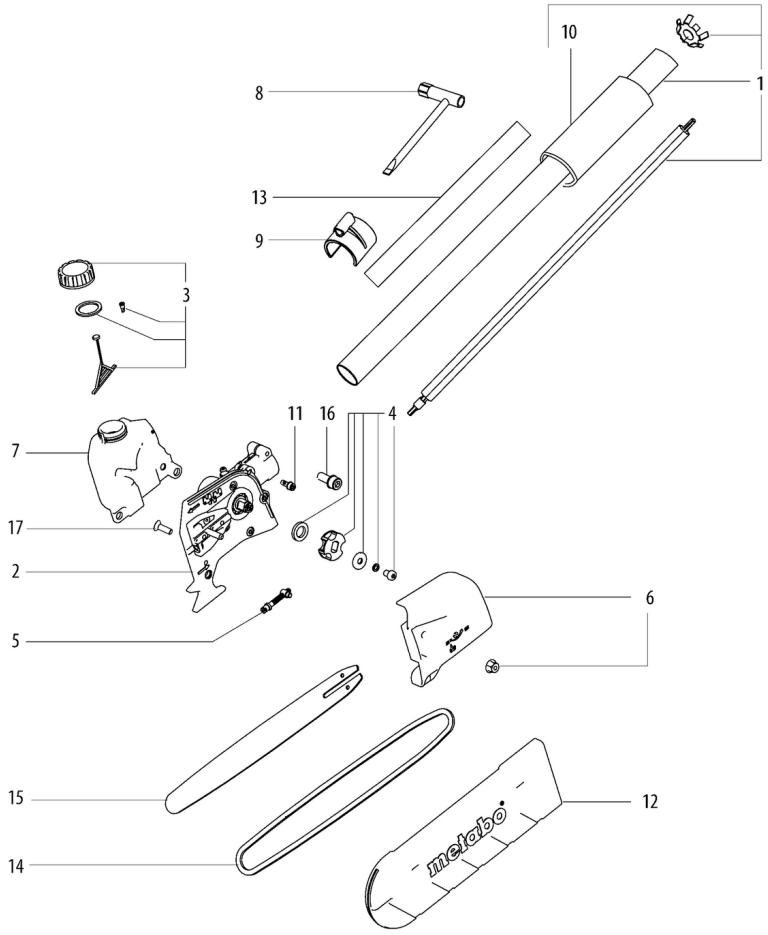
10
1
8
13
9
3
11
16
4
7
17
2
5
6
15
14
12
metabo

Številka	Znesek	Številka za naročanje	Opis	PG
1	1	316078550	Drive shaft cpl.	36
2	1	316078560	Gear-box compl.	34
3	1	316078570	Cover cpl.	13
4	1	316078580	Sprocket wheel cpl.	20
5	1	316078590	CHAIN TENSIONER cpl.	14
6	1	316078600	Cover cpl.	14
7	1	343460950	Oil tank	16
8	1	344199520	Universal spanner	14
9	1	343459580	Tube clamp	18
10	1	344000050	Aluminum tube soft cover	11
11	1	341721710	Screw	11
12	1	343459630	Chain and bar sleeve	14
13	1	338136710	Indicating Label safety icons 01727	12
14	1	628497000	Chain 10‘‘ (3/8"LP / 1,3mm)	
15	1	628496000	Saw rail 25 cm	
16	1	141124160	Screw,M6 x 20	12
17	1	141114700	Countersunk screw	11