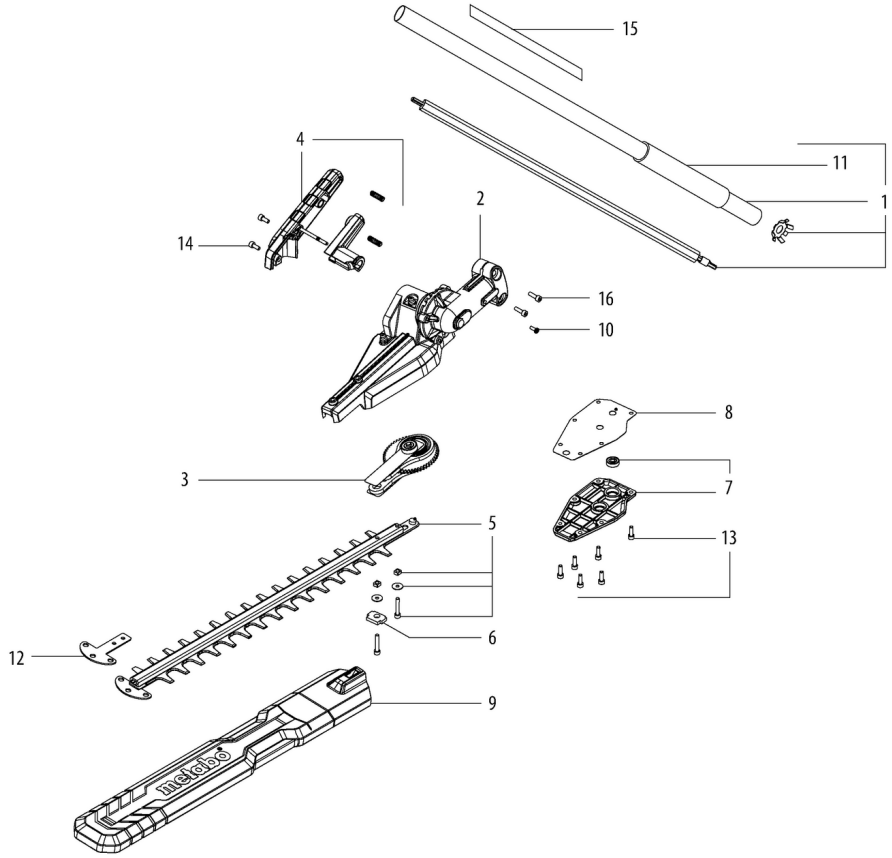
15
11
1
4
2
14
16
10
8
3
7
13
5
6
12
9

Številka	Znesek	Številka za naročanje	Opis	PG
1	1	316079520	Drive shaft cpl.	35
2	1	316078610	Gear-box compl.	32
3	1	316078620	Con rod cpl.	33
4	1	316078630	Angle adjustement compl.	20
5	1	316078640	Knife compl.	40
6	1	341167650	Guide f. knife	12
7	1	315107880	Gear-box cover	22
8	1	344115320	SEAL PACKING	15
9	1	343459620	Hedge trimmer blade (sleeve)	18
10	1	341721710	Screw	11
11	1	344000050	Aluminum tube soft cover	11
12	1	339132000	Hand protector	15
13	1	341721740	Screw	20
14	2	141113710	Cap screw	12
15	1	338136700	Indicating Label safety icons 01726	12
16	2	141124160	Screw,M6 x 20	12