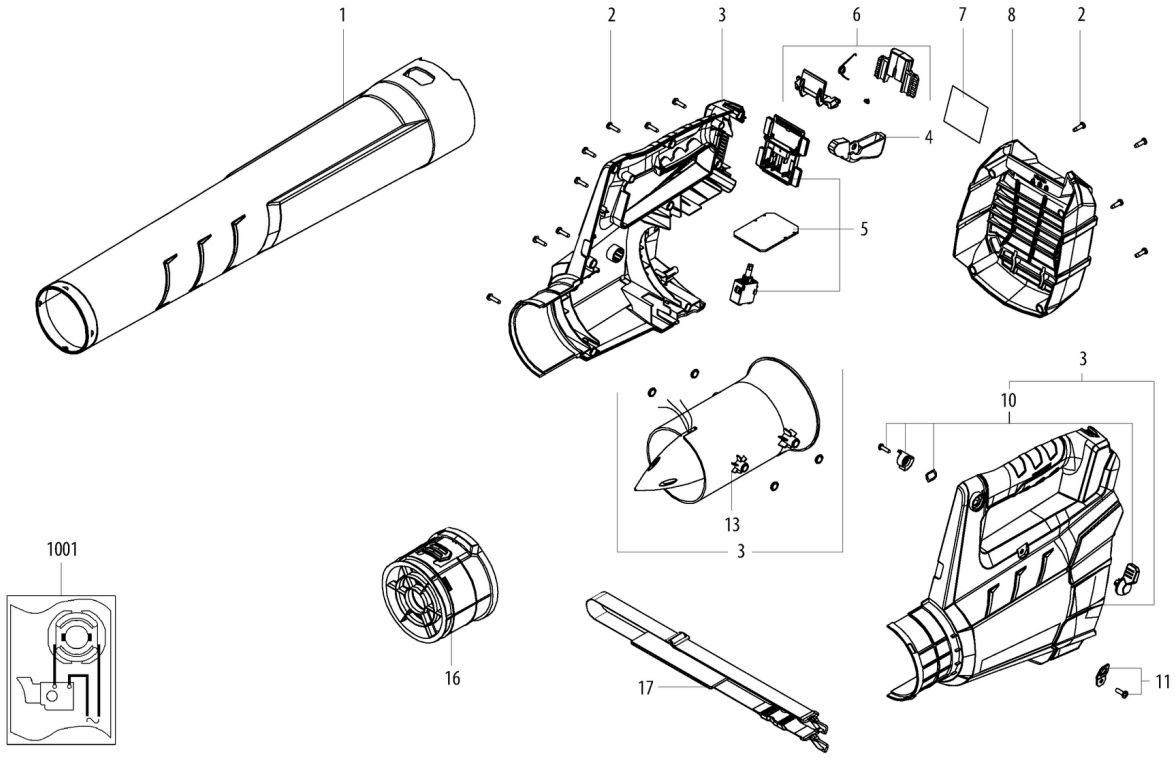
1
2
3
6
7
8
2
4
5
3
10
13
3
1001
16
17
11

Številka	Znesek	Številka za naročanje	Opis	PG
1	1	316099550	Pipe compl.	26
2	12	341723940	Screw	14
3	1	316072730	Plastic housing compl.	30
4	1	343450970	trigger	11
5	1	343088260	Electronic cpl.	37
6	1	316099570	Release cpl.	11
7	1	338073620	Rating plate	12
8	1	343450950	Cover compl.	20
10	1	316099600	Locking lever compl.	11
11	1	316099610	BELT ANCHORAGE cpl.	11
13	1	316072720	Motor compl.	35
16	1	343451000	Cover in the front	15
17	1	628427000	Shoulder strap	
1001	1	338510620	Diagram	