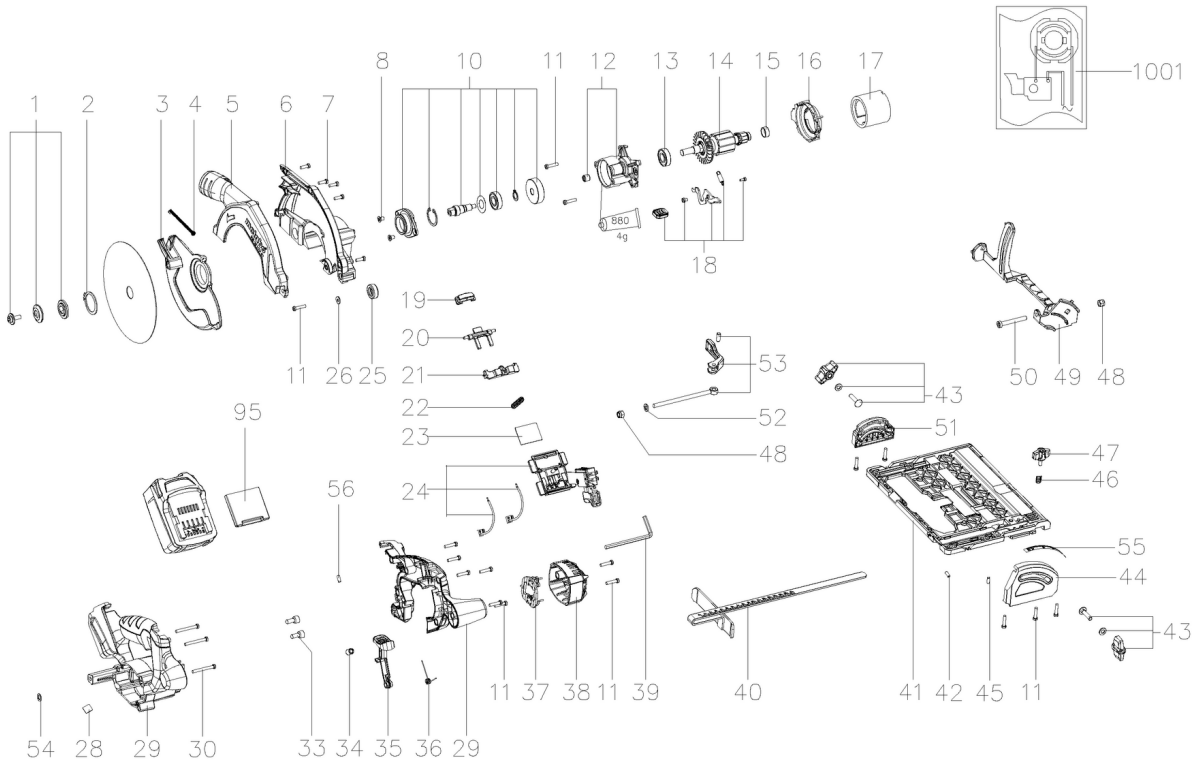
1001
1 2 3 4 5 6 7 8 10 11 12 13 14 15 16 17
18
19 20 21 22 23 24
11 26 25
95
56
53 52 48
43 51 47 46
50 49 48
55 44 43
54 28 29 30
33 34 35 36 29
11 37 38 11 39
40
41 42 45 11

Številka	Znesek	Številka za naročanje	Opis	PG
1	1	316066620	Flange compl.	22
2	1	141180170	Retaining ring	11
3	1	316098620	Pendulum guard comp.	26
4	1	342010940	Extension Spring	11
5	1	315420040	Saw housing cover	19
6	1	343443970	Saw housing	23
7	6	141118730	Self-tap. fill. h. screw	11
8	2	141112210	Countersunk screw	11
10	1	316066590	Gear parts compl.	31
11	16	141116020	Self-tap fill h screw	12
12	1	316066600	Gear housing compl.	25
13	2	143111440	Ball bearing, 12x28x8	27
14	1	310012500	Armature compl.,18 V	36
15	1	344098740	Rubber bushing	11
16	1	343443990	Air baffle	12
17	1	311011880	Field coil compl.,2 pol.	34
18	1	316097730	Spindle lock compl.	20
19	1	343440140	Press button	11
20	1	343410570	Switch slide	11
21	1	343440150	Pressure plate	11
22	1	342001770	Pressure spring	11
23	1	338069180	Rating plate 01857000 KS 18 LTX 57	12
24	1	343412360	Switch compl.	34
25	1	344113580	Rubber ring	11
26	1	141150110	Washer	11
28	1	338129940	Indication label	12
29	1	343443980	Motor housing	29
30	3	341704820	Screw	11
33	2	399999990	Part not needed	
34	1	343255250	Toroidal Ferrite	
35	1	343444020	Switch-on lock	12
36	1	342024090	Handle Trigger Spring	11
37	1	316053210	Brush holder compl.,18 V	23
38	1	343447660	Motor cap	14
39	1	344161520	Cranked wrench key	12
40	1	331054720	Parallel guide	18
41	1	339139390	Guide plate	31
42	1	342001140	Index bolt	12
43	1	316066640	Thumb-nut compl.	19
44	1	343444900	Turning support	17
45	1	141123910	Grub screw	11
46	1	342024140	Depth Plate Spring	11
47	1	341722800	Thumbscrew	12
48	2	141130650	Hexagonal lock nut	12
49	1	339148570	Depth rule guide	27
50	1	341722870	Fillister head screw	11
51	1	343411590	Console	13
52	1	339006470	Friction Washer	11
53	1	316066610	Clamping lever compl.	19
54	1	141153390	Washer ZN5BK	11
55	1	339130190	bevel angle scale	11
56	1	344092220	Rubber plug	11

Številka	Znesek	Številka za naročanje	Opis	PG
80	1	141124620	Grub screw	11
95	1	343439680	Cover cap	11
880	1	344130970	Grease 50Gr 1,8oz	22
1001	1	338510510	Wiring diagram	