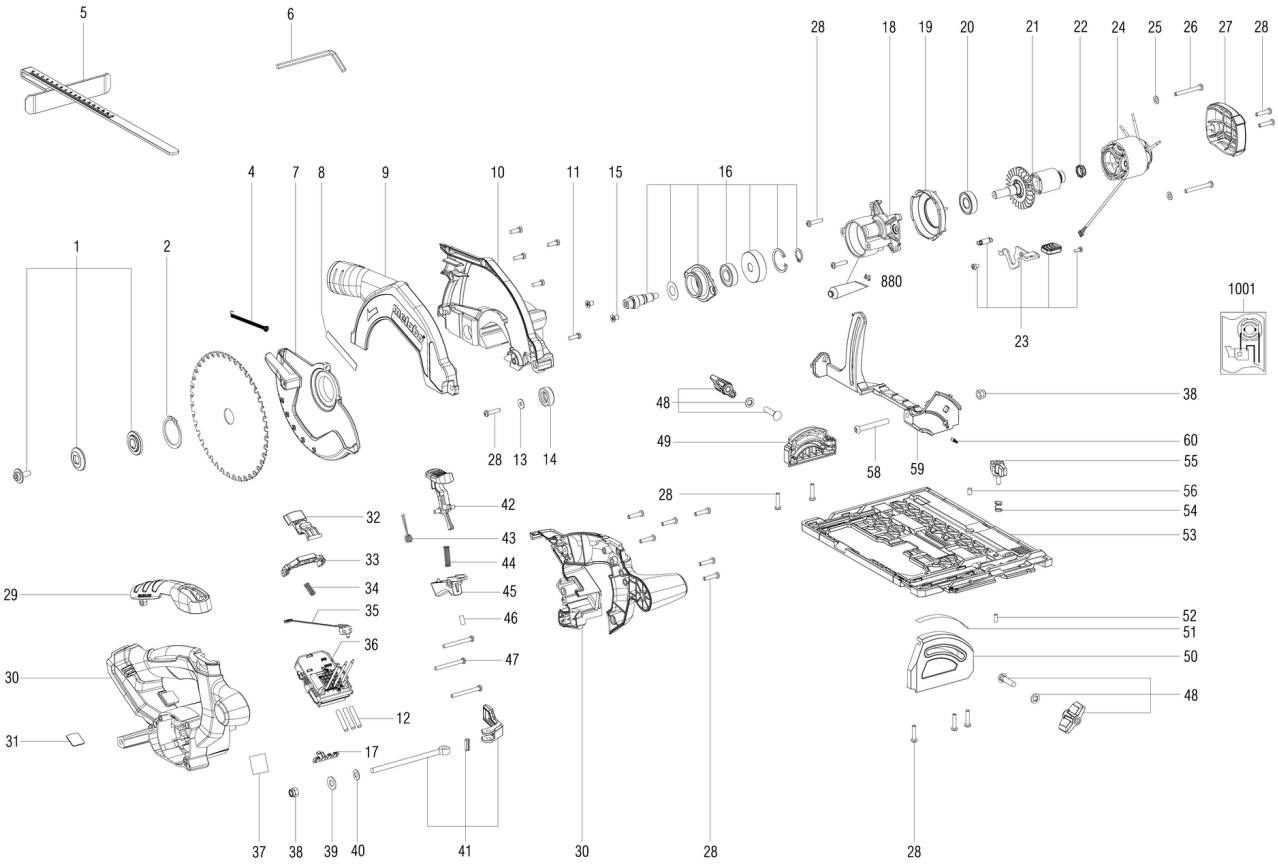
5
6
28
18
19
20
21
22
24
25
26
27
28
4
7
8
9
10
11
15
16
1
2
880
1001
23
48
38
49
60
58
59
55
28
56
54
53
42
32
43
33
44
34
45
35
46
36
47
29
52
51
30
50
48
31
12
17
37
38
39
40
41
30
28
28

Številka	Znesek	Številka za naročanje	Opis	PG
1	1	316066620	Flange compl.	22
2	1	141180170	Retaining ring	11
4	1	342010940	Extension Spring	11
5	1	331054720	Parallel guide	18
6	1	344161520	Cranked wrench key	12
7	1	316098620	Pendulum guard comp.	26
8	1	338137410	Typenschild 11857XXX KS 18 LTX 57 BL	12
9	1	315421300	Saw housing cover	18
10	1	343443970	Saw housing	23
11	6	141118730	Self-tap. fill. h. screw	11
12	3	341213440	Shrink hose	11
13	1	141150110	Washer	11
14	1	344113580	Rubber ring	11
15	2	141112210	Countersunk screw	11
16	1	316066590	Gear parts compl.	31
17	1	343447010	Insert	11
18	1	316066600	Gear housing compl.	25
19	1	339153250	Baffle	13
20	2	143111440	Ball bearing, 12x28x8	27
21	1	310013850	Rotor compl.	35
22	1	344102650	Rubber bushing	14
23	1	316097730	Spindle lock compl.	20
24	1	311013870	Stator compl.	37
25	2	339007830	Washer	11
26	2	141116990	Self-tap. fill. h. screw	12
27	1	343460100	Motor cap	16
28	16	141116020	Self-tap fill h screw	12
29	1	343449660	Handle element	14
30	1	315015240	Motor housing	28
31	1	338129960	Indication label, CAS	12
32	1	343460090	Press button	12
33	1	343413200	Sliding guide	12
34	1	342024110	Laser Spring	11
35	1	343087290	Micro switch	21
36	1	343092060	electronic unit	44
37	1	338080830	Rating plate 611857 TV00 KS 18LTX 57 BL	12
38	2	141130650	Hexagonal lock nut	12
39	1	339006470	Friction Washer	11
40	1	141153390	Washer ZN5BK	11
41	1	316066610	Clamping lever compl.	19
42	1	343446360	Release button	11
43	1	342022550	Spring clip	11
44	1	342001770	Pressure spring	11
45	1	343446350	Switch trigger	11
46	1	344092220	Rubber plug	11
47	3	341704820	Screw	11
48	1	316066640	Thumb-nut compl.	19
49	1	343411590	Console	13
50	1	343444900	Turning support	17
51	1	339130190	bevel angle scale	11
52	1	141123910	Grub screw	11
53	1	339139390	Guide plate	31

Številka	Znesek	Številka za naročanje	Opis	PG
54	1	342024140	Depth Plate Spring	11
55	1	341722800	Thumbscrew	12
56	1	141124620	Grub screw	11
58	1	341722870	Fillister head screw	11
59	1	339148570	Depth rule guide	27
60	1	342001140	Index bolt	12
880	1	344130970	Grease 50Gr 1,8oz	22
1001	1	338511000	Wiring diagram	