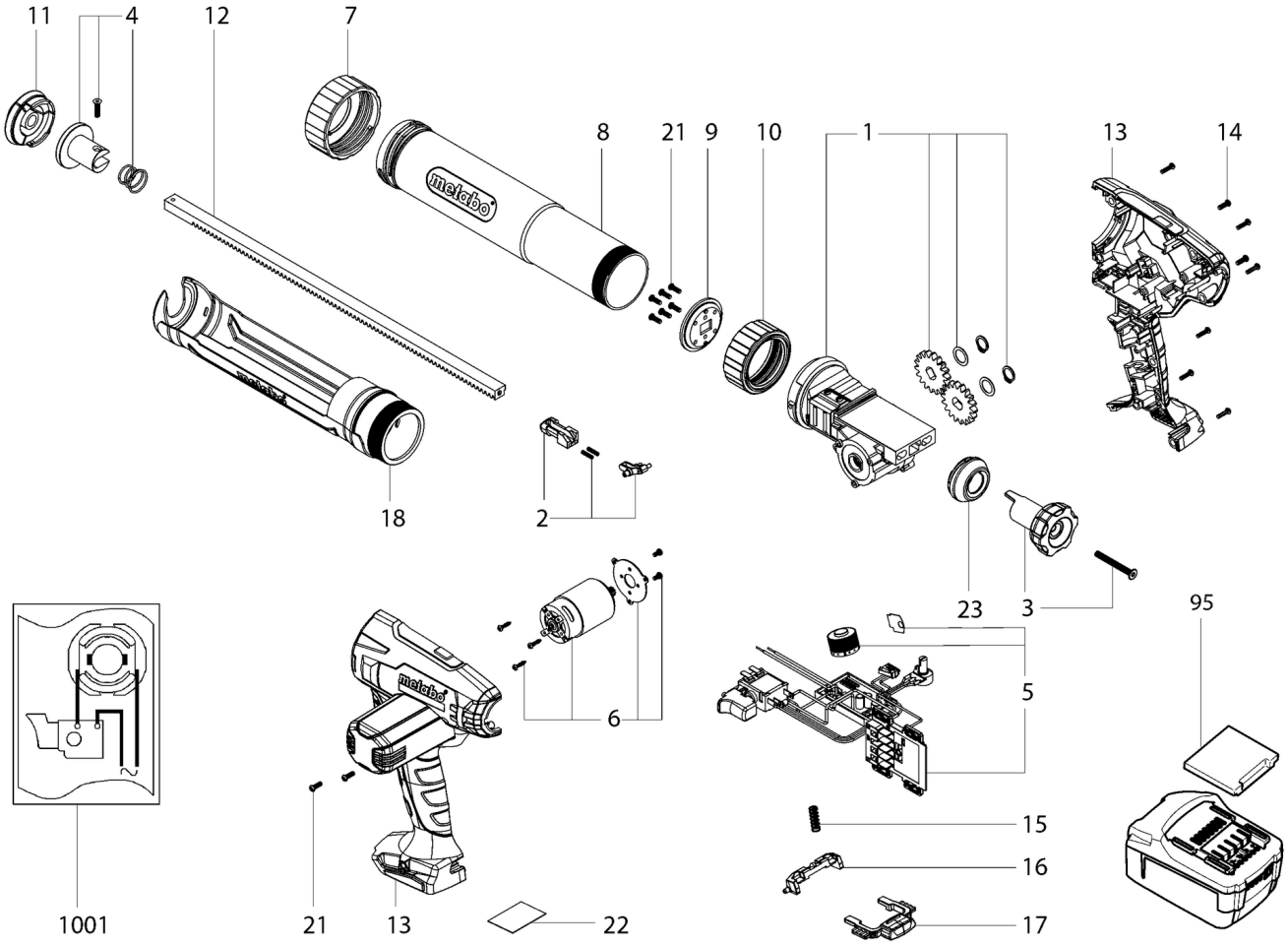
11
4
12
7
8
21
9
10
1
13
14
18
2
23
3
95
5
6
15
16
17
1001
21
13
22

Številka	Znesek	Številka za naročanje	Opis	PG
1	1	316096170	Gear-box compl.	48
2	1	316096180	Release (f. reverse) cpl.	20
3	1	316096190	soft grip	26
4	1	316096200	plunger disc cpl.	28
5	1	316096210	Electronic cpl.	48
6	1	317004900	Motor w.flange	31
7	1	343444930	Front Cap	28
8	1	315418070	Heat shrink tube 600 ml.	34
9	1	343444980	Connecting piece	19
10	1	315418090	Connection piece	24
11	1	343444940	plunger disc	24
12	1	343444960	Rack 600 ml.	37
13	1	343444970	Housing (L+R)	31
14	8	341704750	Screw,TP 3x14 TX10	11
15	1	342024280	Spring	11
16	1	343430520	Locking piece	11
17	1	343430530	Switch slide	12
18	1	315420000	skeleton 400ml	35
21	10	141124560	RAISED CHEESE HEAD SCREW	11
22	1	338068350	Rating plate	11
23	1	344113690	COUPLING	18
1001	1	338510180	Wiring diagram	