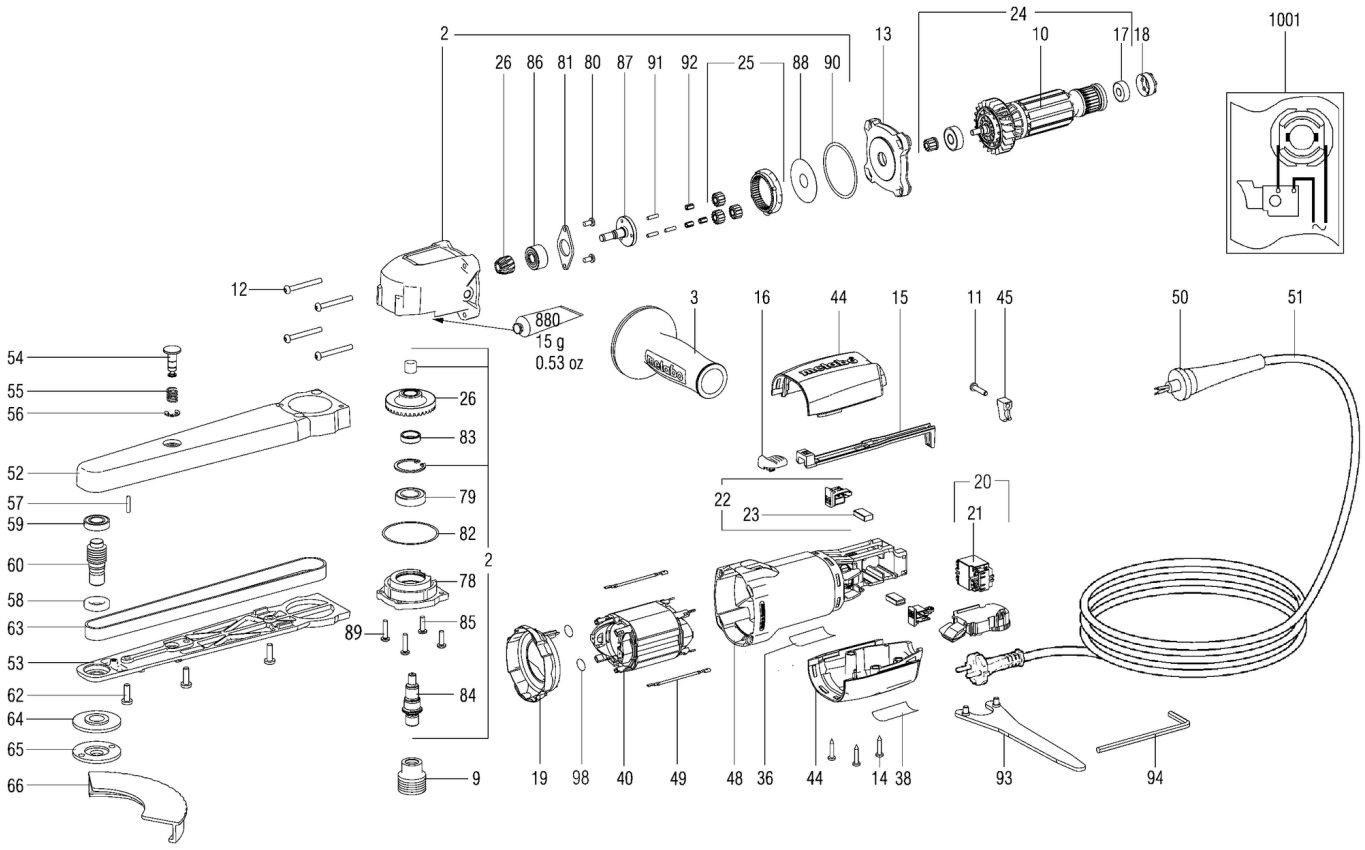
2
26
86
81
80
87
91
92
25
88
90
13
24
10
17
18
1001
12
880
15 g
0.53 oz
3
16
44
15
11
45
50
51
54
55
56
52
57
59
60
58
63
53
62
64
65
66
26
83
79
82
2
78
85
89
84
9
22
23
20
21
19
98
40
49
48
36
44
14
38
93
94

Številka	Znesek	Številka za naročanje	Opis	PG
2	1	316063950	Gear-box compl.	53
3	1	316046590	Side support handle compl.	20
9	1	341605120	Drive shaft	34
10	1	310011280	Armature compl., 230V	34
11	1	141116020	Self-tap fill h screw	12
12	4	141123380	Self-tap. fill. h. screw	11
13	1	315202610	Bearing flange	28
14	3	141113180	Self-tap. fill. h. screw	11
15	1	343430940	Switch rod	11
16	1	343397810	Switch slide,H/L	11
17	1	143115690	Ball bearing,6x19x6	13
18	1	344097870	Rubber bushing	11
19	1	343436590	Baffle	13
20	1	316057490	Switch with elektronic,230 V / 50-60 Hz	34
21	1	343409640	Switch	19
22	2	316046890	Brush holder compl. cut out	22
23	1	316046900	Carbon brush set cut-off	22
24	1	316063540	Armature compl.,230V	36
25	1	316063500	Gear parts compl.	20
26	1	316061120	Bevel gear and pinion	23
36	1	399999990	Part not needed	
38	1	338067030	Rating plate	11
40	1	311009770	Field coil 230 V elec	33
44	1	343432950	2 part motor cap	20
45	1	343362490	Cable clip	12
48	1	315013660	Motor housing	22
49	2	344498880	Strand compl.	11
50	1	344097360	Cable sleeve	11
51	1	344493180	Cable with CEE plug	27
52	1	315419640	Housing	27
53	1	315419650	Housing cover	27
54	1	341515850	Locking bolt	21
55	1	342003690	Spring	11
56	1	141181500	Circlip	11
57	1	143115440	Needle roller	11
58	1	143115260	Ball bearing,15x24x5	20
59	1	143115270	Ball bearing,12x24x6	21
60	1	341211970	Shaft	35
62	3	141121640	Fill. head screw(DIN 7985)	11
63	1	344260320	V-belt	33
64	1	341032350	clamping flange	25
65	1	341102620	Clamping nut	26
66	1	339204740	Wheel guard	29
78	1	315105380	Bearing flange	26
79	1	143115620	Ball bearing,	19
80	2	141119570	Fill. head screw(DIN 7985)	11
81	1	339136610	Fixed bearing cover	11
82	1	339012050	Compensating washer	14
83	1	341210860	Spacer sleeve	17
84	1	341605130	Spindle	29
85	2	141124090	Fillister head screw	11
86	1	143115630	Angular ball bearing double-rowed, 15x32	28

Številka	Znesek	Številka za naročanje	Opis	PG
87	1	341604710	Planet carrier	28
88	1	341080230	Butting washer	11
89	2	141124370	Fillister head screw	11
90	1	143195470	O-ring	11
91	3	143115610	Needle roller	11
92	3	143115450	3eedle roller and cage	16
93	1	344163920	Pin spanner	14
94	1	344161510	Hexagonal key	12
98	2	143195530	O-ring	11
880	1	344130800	Grease FG 126	26
1001	1	338505710	Wiring diagram	