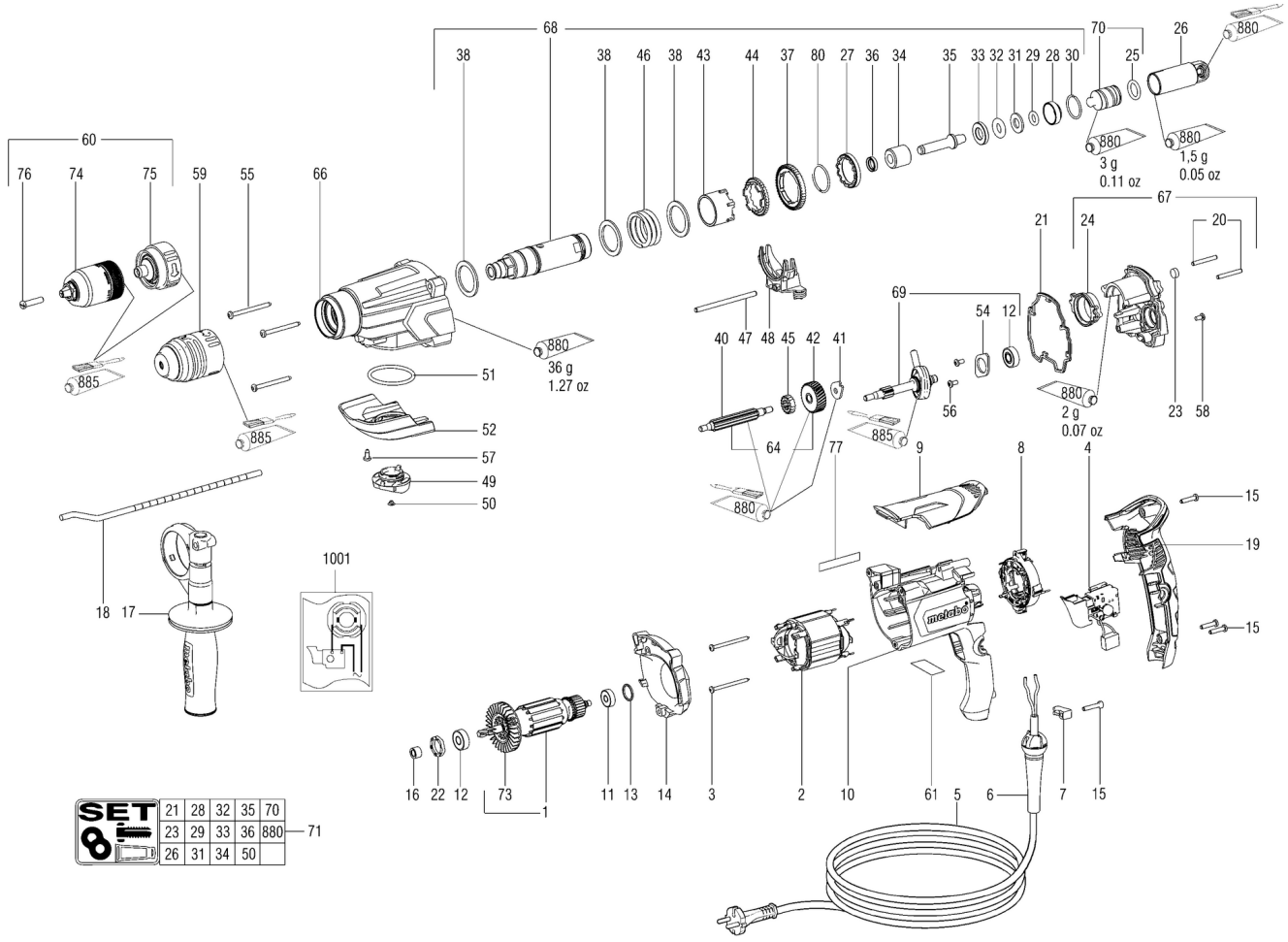
68
70
26
880
38
38
46
38
43
44
37
80
27
36
34
35
33
32
31
29
28
30
25
880
3 g
0.11 oz
880
1,5 g
0.05 oz
60
76
74
75
59
55
66
67
21
24
20
880
36 g
1.27 oz
885
885
51
52
57
49
50
40
47
48
45
42
41
69
54
12
56
885
880
2 g
0.07 oz
23
58
64
77
880
9
8
4
15
19
15
18
17
1001
16
22
12
73
1
11
13
14
3
2
10
61
5
6
7
15
SET
21
28
32
35
70
23
29
33
36
880
71
26
31
34
50

Številka	Znesek	Številka za naročanje	Opis	PG
1	1	310012010	Armature compl.,230 V	33
2	1	311012550	Field coil w.field coil,230 V	25
3	2	141116090	Self-tap. fill. h. screw	11
4	1	343410970	Electronic switch without dial	25
5	1	344486730	Cable with plug	26
6	1	343394300	Cable sleeve	12
7	1	343362490	Cable clip	12
8	1	316051990	Brush holder module,230V - V-El. 850W	23
9	1	343438140	Cover	13
10	1	315013700	Motor housing	24
11	1	143115690	Ball bearing,6x19x6	13
12	1	143114880	Ball bearing, 8x22x7	14
13	1	143192430	O-ring	12
14	1	343438070	Intermediate flange	13
15	4	141117060	Self-tap. fill. h. screw	12
16	1	343376040	Sealing ring	12
17	1	314001460	Support handle compl.	23
18	1	341511630	Depth stop	16
19	1	343438030	Handle cover	19
20	2	341520230	Cylindrical pin	11
21	1	344101780	Seal	12
22	1	344095920	Rubber buffer	11
23	1	344070670	Felt seal	11
24	1	341006300	Bearing ring	15
25	1	143195350	O-ring	11
26	1	341211330	exciter sleeve compl.	26
27	1	341071750	Ratched wheel	12
28	1	341059760	Catching sleeve	15
29	1	143195210	O-ring	11
30	1	141156560	Circlip	11
31	1	339007190	Washer	11
32	1	143195150	O-ring	12
33	1	341013470	Support ring	15
34	1	341005950	Bushing	17
35	1	341212200	piston	21
36	1	143195380	Shaft sealing ring	11
37	1	340004450	Intermediate gear	19
38	3	339007150	Washer	12
40	1	340004490	Pinion shaft	24
41	1	339134350	guide sheet	11
42	1	340013090	Spur gear	16
43	1	341071830	clutch hub	15
44	1	340004530	Claw wheel	13
45	1	340004460	coupling sleeve	11
46	1	342004060	Pressure spring	12
47	1	341540220	Switch rod	11
48	1	316062550	Shift element compl.	14
49	1	316062450	Control knob compl.	14
50	1	343376750	Seal	12
51	1	143195870	O-ring	11
52	1	343438250	Housing cap,KHE	15
54	1	339137180	Bearing cover	11

Številka	Znesek	Številka za naročanje	Opis	PG
55	3	141123610	Self-tap. fill. h. screw	11
56	2	141119570	Fill. head screw(DIN 7985)	11
57	1	141116130	Self-tap. fill. h. screw	11
58	1	141123980	Fillister head screw	11
59	1	316071590	Removable chuck	28
60	1	316084150	Keyless chcuk w.adapt.	33
61	1	338066940	Rating plate	11
64	1	316065240	Intermediate shaft compl.	30
66	1	316063980	Gear housing compl.	32
67	1	316063990	Gear flange cpl.	29
68	1	316069070	Drill driving sleeve compl.	43
69	1	316064010	Wobbler drive compl.	34
70	1	316065360	Striker compl.	24
71	1	316064020	Maintenance kit SDS	46
73	1	330001820	Fan	13
74	1	301003140	Keyless chuck, 1,5-13	32
75	1	316050630	Quick-change adaptor	32
76	1	341703360	Cap screw	17
77	1	399999990	Part not needed	
80	1	141156360	Circlip	11
880	1	344130800	Grease FG 126	26
885	1	344131210	Tube Grease,50g Klueber Microlube GL 261	31
1001	1	338505160	Wiring diagram,230 V	