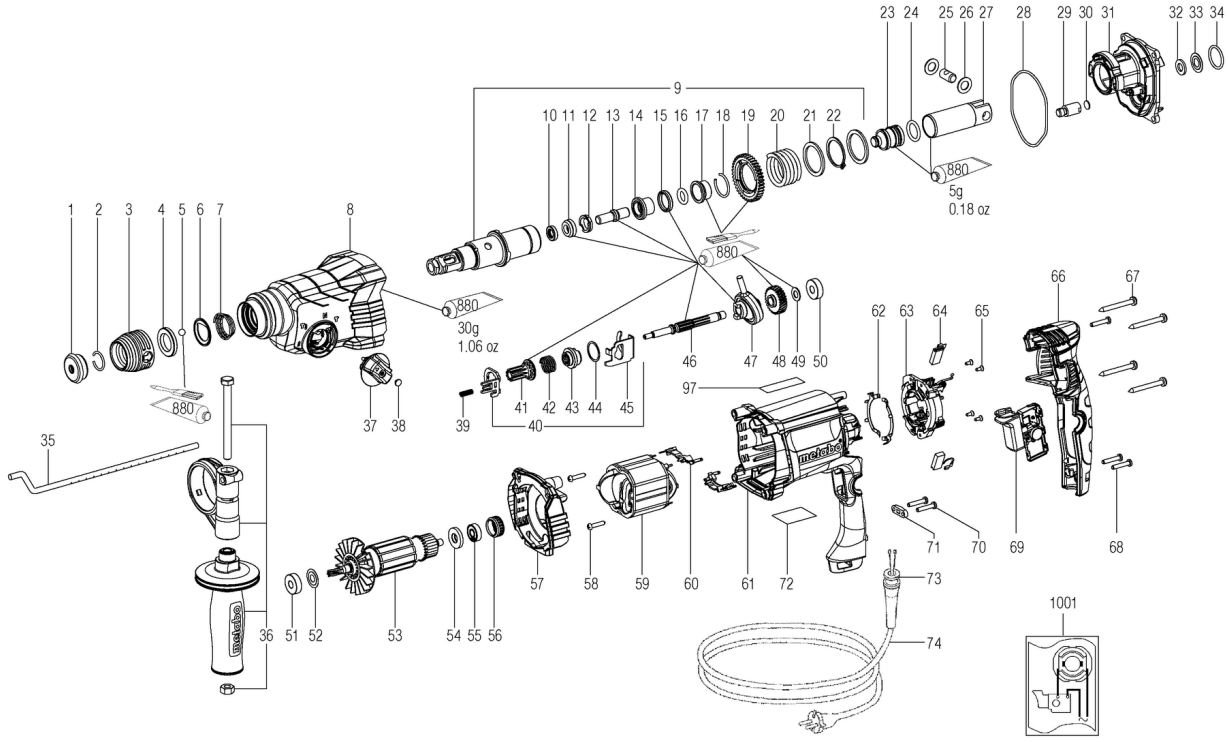
880
30g
1.06 oz
880
5g
0.18 oz
880
880
1001

Številka	Znesek	Številka za naročanje	Opis	PG
1	1	344103910	Rubber cap	15
2	1	342023930	RETAINING RING	12
3	1	343412500	Adjusting ring	12
4	1	344103970	Damper	13
5	1	341164440	STEEL BALL	11
6	1	339145950	Guide plate	11
7	1	342010820	Pressure spring	11
8	1	316099670	Gear housing compl.	29
9	1	316073180	Drill driving sleeve compl.	35
10	1	339012510	Shaft sealing ring	14
11	1	341007040	Bushing	12
12	1	341006900	Bushing	16
13	1	341020450	Piston	17
14	1	341007010	Bushing	14
15	1	344103920	Rubber ring	13
16	1	344103980	O-ring	13
17	1	341019510	Catching sleeve	20
18	1	342010850	RETAINING RING	13
19	1	340004910	Intermediate gear	20
20	1	342010830	Pressure spring	13
21	2	341721660	Thrust washer	11
22	1	342023940	RETAINING RING	12
23	1	341020480	Striker	18
24	1	344103930	Sealing ring	20
25	1	341523820	Pin	12
26	2	339008210	Washer	11
27	1	341020460	exciter sleeve	29
28	1	342023950	sealing ring	11
29	1	344103940	Rubber cap	11
30	1	344070680	Felt seal	13
31	1	316073190	Gear flange compl.	24
32	1	343380420	Centrifugal washer	12
33	1	339008220	Washer	11
34	1	344103990	O-ring	11
35	1	341511630	Depth stop	16
36	1	314001460	Support handle compl.	23
37	1	316099650	Control knob compl.	18
38	1	343398340	Seal	11
39	1	342010860	Pressure spring	11
40	1	316073200	Shift element compl.	26
41	1	340004920	coupling sleeve	22
42	1	342010840	Pressure spring	13
43	1	341020470	dog clutch	16
44	1	339008230	Washer	11
45	1	339145960	Shift fork	11
46	1	340004930	Intermediate gear	21
47	1	320051100	Wobble bearing	25
48	1	340020140	Spur gear	19
49	1	339008490	Washer	11
50	1	320051110	Ball bearing	15
51	1	320051120	Ball bearing	17
52	1	339009570	Washer	11

Številka	Znesek	Številka za naročanje	Opis	PG
53	1	310013550	Armature compl.,230V	33
54	1	343456390	Sealing washer	11
55	1	320051130	Ball bearing	12
56	1	344115020	Rubber bushing	11
57	1	343453240	Flange	12
58	2	341721670	Hex head screw	11
59	1	311013600	Field coil compl.,230V	29
60	2	339082270	Connector	11
61	1	343454550	Motor housing	23
62	2	342023960	Flat spring	11
63	1	316073230	Brush holder module,230V - V-El. 850W	21
64	1	316073240	Carbon brush set	14
65	4	341721690	Screw	11
66	1	343455410	handle cover	19
67	4	341721820	Self-tap. fill. h. screw	11
68	3	141116020	Self-tap fill h screw	12
69	1	343412780	Electronic switch without dial,230V	25
70	2	341721680	Hex head screw	11
71	1	343456400	Cable clip	11
72	1	338077580	Rating plate	11
73	1	344104000	Cable sleeve	11
74	1	344533500	Cable with plug	25
75	1	316099620	Gear-box compl.Hikoki M200061	49
880	1	344130800	Grease FG 126	26