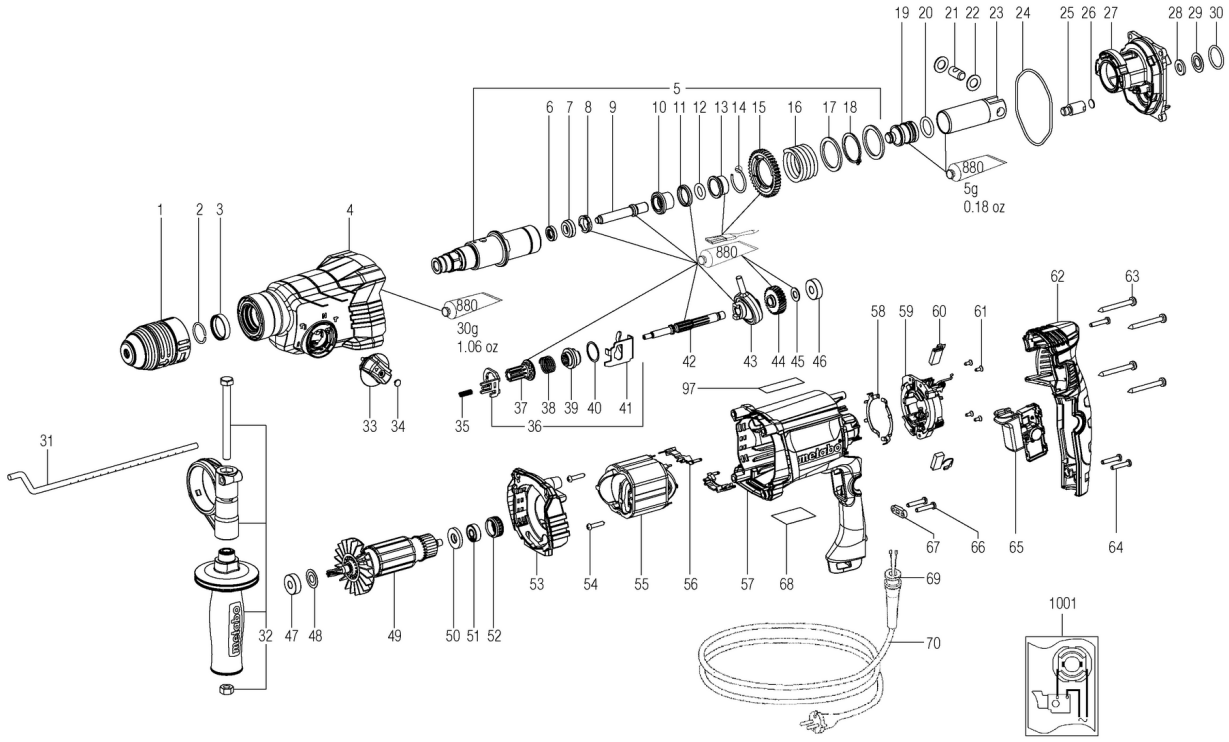
1
2
3
4
5
6
7
8
9
10
11
12
13
14
15
16
17
18
19
20
21
22
23
24
25
26
27
28
29
30
31
32
33
34
35
36
37
38
39
40
41
42
43
44
45
46
47
48
49
50
51
52
53
54
55
56
57
58
59
60
61
62
63
64
65
66
67
68
69
70
97
1001
880
30g
1.06 oz
880
5g
0.18 oz

Številka	Znesek	Številka za naročanje	Opis	PG
1	1	316071590	Removable chuck	28
2	1	342024650	Retaining ring	11
3	1	341006760	Bushing	18
4	1	316099660	Gear housing compl. Quick	32
5	1	316099640	Drill driving sleeve compl. Quick	40
6	1	339012510	Shaft sealing ring	14
7	1	341006890	Bushing	13
8	1	341006900	Bushing	16
9	1	341213740	Piston Quick	20
10	1	341007010	Bushing	14
11	1	344103920	Rubber ring	13
12	1	344103980	O-ring	13
13	1	341019510	Catching sleeve	20
14	1	342010850	RETAINING RING	13
15	1	340004910	Intermediate gear	20
16	1	342010830	Pressure spring	13
17	2	341721660	Thrust washer	11
18	1	342023940	RETAINING RING	12
19	1	341020480	Striker	18
20	1	344103930	Sealing ring	20
21	1	341523820	Pin	12
22	2	339008210	Washer	11
23	1	341020460	exciter sleeve	29
24	1	342023950	sealing ring	11
25	1	344103940	Rubber cap	11
26	1	344070680	Felt seal	13
27	1	316073190	Gear flange compl.	24
28	1	343380420	Centrifugal washer	12
29	1	339008220	Washer	11
30	1	344103990	O-ring	11
31	1	341511630	Depth stop	16
32	1	314001460	Support handle compl.	23
33	1	316099650	Control knob compl.	18
34	1	343398340	Seal	11
35	1	342010860	Pressure spring	11
36	1	316073200	Shift element compl.	26
37	1	340004920	coupling sleeve	22
38	1	342010840	Pressure spring	13
39	1	341020470	dog clutch	16
40	1	339008230	Washer	11
41	1	339145960	Shift fork	11
42	1	340004930	Intermediate gear	21
43	1	320051100	Wobble bearing	25
44	1	340020140	Spur gear	19
45	1	339008490	Washer	11
46	1	320051110	Ball bearing	15
47	1	320051120	Ball bearing	17
48	1	339009570	Washer	11
49	1	310013550	Armature compl.,230V	33
50	1	343456390	Sealing washer	11
51	1	320051130	Ball bearing	12
52	1	344115020	Rubber bushing	11

Številka	Znesek	Številka za naročanje	Opis	PG
53	1	343453240	Flange	12
54	2	341721670	Hex head screw	11
55	1	311013600	Field coil compl.,230V	29
56	2	339082270	Connector	11
57	1	343454550	Motor housing	23
58	2	342023960	Flat spring	11
59	1	316073230	Brush holder module,230V - V-El. 850W	21
60	1	316073240	Carbon brush set	14
61	4	341721690	Screw	11
62	1	343455410	handle cover	19
63	4	341721820	Self-tap. fill. h. screw	11
64	3	141116020	Self-tap fill h screw	12
65	1	343412780	Electronic switch without dial,230V	25
66	2	341721680	Hex head screw	11
67	1	343456400	Cable clip	11
68	1	338077610	Rating plate	12
69	1	344104000	Cable sleeve	11
70	1	344533500	Cable with plug	25
71	1	316099630	Gear-box compl.Quick Hikoki M200062	49
880	1	344130800	Grease FG 126	26
1001	1	338505160	Wiring diagram,230 V	