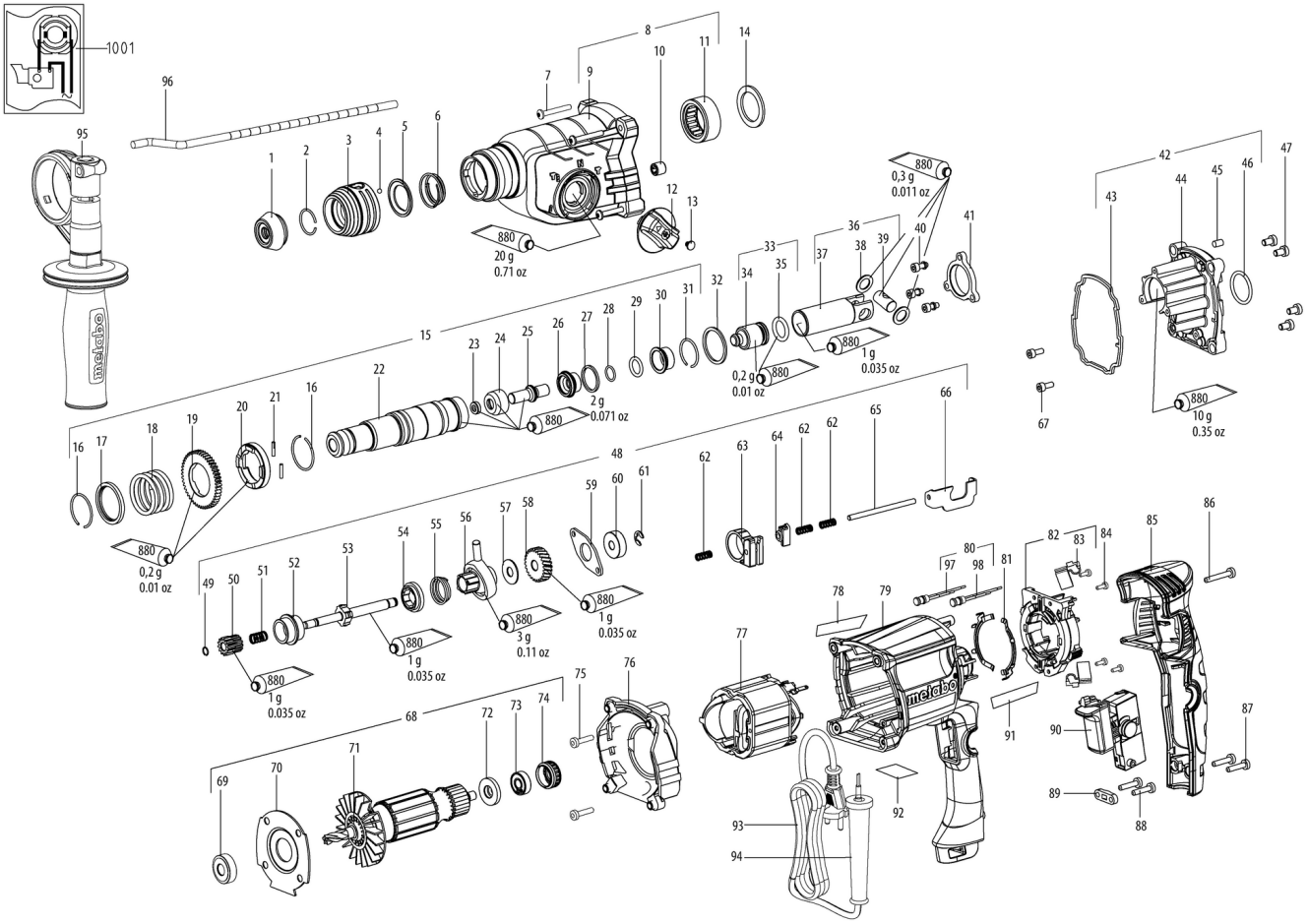
1001
880
0,3 g
0.011 oz
20 g
0.71 oz
0,2 g
0.01 oz
2 g
0.071 oz
1 g
0.035 oz
3 g
0.11 oz
10 g
0.35 oz
metabo

Številka	Znesek	Številka za naročanje	Opis	PG
1	1	344103030	Rubber cap	11
2	1	141181780	Circlip	11
3	1	343455830	Adjusting ring	14
4	1	143115330	Ball	11
5	1	339008430	Fence plate	11
6	1	342010870	Conical comp spring	11
7	1	141123940	Self-tap. fill. h. screw	11
8	1	316074450	Gear housing front compl.	27
12	1	316074460	Control knob compl.	15
13	1	343455930	Seal	11
14	1	339008200	Washer	13
15	1	316074550	Drill driving sleeve compl.	41
32	1	339008440	Washer	11
33	1	316074560	Striker cpl.	20
36	1	316074570	exciter sleeve compl.	21
40	1	341705720	Screw with spring washer	11
41	1	341006940	Bearing ring	14
42	1	316074620	Gear housing rear compl.	25
47	1	341720430	Countersunk head screw	11
48	1	316074630	gear spindle assy	38
67	1	141113590	Cap screw	12
68	1	310013620	Armature compl.,230V	34
75	1	141123490	Fillister head screw	11
76	1	343458130	Intermediate flange(red)	13
77	1	311013690	Field coil w.field coil,230 V	25
78	1	338134850	Nameplate 01709XXX KHE 2445	12
79	1	315015200	Motor housing	23
80	1	343255360	Interf. suppr.,230V	11
81	1	342023960	Flat spring	11
82	1	316073230	Brush holder module,230V - V-El. 850W	21
83	1	316073240	Carbon brush set	14
84	1	341721690	Screw	11
85	1	343456020	Handle cover	19
86	1	141116020	Self-tap fill h screw	12
87	1	141116020	Self-tap fill h screw	12
88	1	341721680	Hex head screw	11
89	1	343456400	Cable clip	11
90	1	343412780	Electronic switch without dial,230V	25
91	1	338134850	Nameplate 01709XXX KHE 2445	12
92	1	338077520	Rating plate	12
93	1	344486730	Cable with plug	26
94	1	344104000	Cable sleeve	11
95	1	314001140	Side support handle compl.	23
96	1	341511630	Depth stop	16
97	1	399999990	Part not needed	
880	1	344131460	Special Grease	23
1001	1	338510720	Diagram	