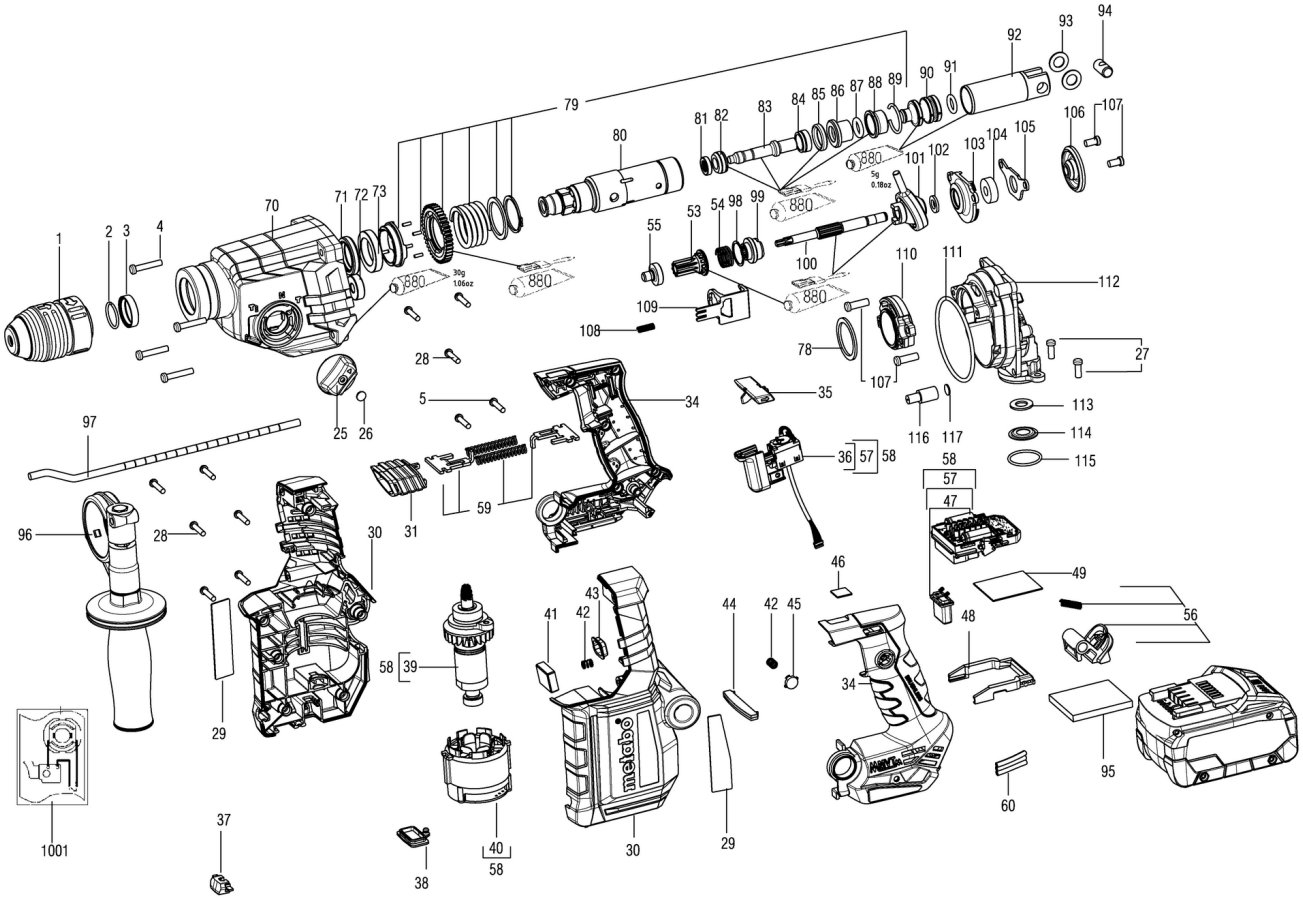
1
2
3
4
70
71
72
73
79
80
81
82
83
84
85
86
87
88
89
90
91
92
93
94
106
107
101
102
103
104
105
55
53
54
98
99
100
110
111
112
109
108
78
107
27
28
5
34
35
25
26
97
116
117
113
114
115
36
57
58
58
57
47
96
28
30
31
59
46
49
56
41
42
43
44
42
45
48
58
39
34
29
95
60
1001
37
38
40
58
30
29

Številka	Znesek	Številka za naročanje	Opis	PG
1	1	316071590	Removable chuck	28
2	1	342024650	Retaining ring	11
3	1	341006760	Bushing	18
4	4	141124880	Self-tap. fill. h. screw	11
5	1	341704820	Screw	11
25	1	316099650	Control knob compl.	18
26	1	343398340	Seal	11
27	2	141113670	Cap screw	12
28	11	141116020	Self-tap fill h screw	12
29	1	338134390	Type label 01715XXX KH 18 LTX BL 28 Q	12
30	1	343453340	Motor housing w.cover	26
31	1	344114950	Bellows	12
34	1	343453350	Handle half w.cover	25
35	1	343453370	Switch slide,R/L	19
36	1	343413340	poti switch	28
37	1	316070960	LED compl.	18
38	1	344102000	Rubber cap	12
39	1	310013320	Armature compl.	34
40	1	311013430	Field coil compl.	33
41	1	343089120	Electronic unit, speed button	18
42	2	342003950	Pressure spring	11
43	1	343088930	Speed selection button	13
44	1	344102990	Rubber buffer	12
45	1	343434440	Locking catch	11
46	1	338129960	Indication label, CAS	12
48	1	343454090	Locking piece	18
49	1	338077500	Rating plate	11
53	1	340004970	Second pinion	23
54	1	342010840	Pressure spring	13
55	1	341005700	Pinion sleeve	17
56	1	343458140	Release Bracket	11
57	1	343089460	electronic unit, KH 18 LTX BL 28 Q	50
58	1	316077680	Motor compl. with electronic	58
59	1	339139140	Shock absorber cpl.	18
60	3	341213440	Shrink hose	11
70	1	316074710	Gear housing compl.	28
71	1	339013330	Oil seal	17
72	1	320051190	Ball bearing	14
73	1	320051180	Ball bearing	18
79	1	316079760	Drill driving sleeve compl.	40
80	1	316074720	cylinder cpl.	38
81	1	339012510	Shaft sealing ring	14
82	1	341005100	Hammer holder(C)	22
83	1	341013540	second hammer	18
84	1	341005200	Sleeve(FW)	20
85	1	344103920	Rubber ring	13
86	1	341006950	Hammer holder (A)	17
87	1	344103980	O-ring	13
88	1	341019510	Catching sleeve	20
89	1	342010850	RETAINING RING	13
90	1	341013550	Striker	19
91	1	344103930	Sealing ring	20

Številka	Znesek	Številka za naročanje	Opis	PG
92	1	341020460	exciter sleeve	29
93	1	339008210	Washer	11
94	1	341523820	Pin	12
95	1	343439680	Cover cap	11
96	1	314001460	Support handle compl.	23
97	1	341511630	Depth stop	16
98	1	339008230	Washer	11
99	1	341020470	dog clutch	16
100	1	340004980	Second shaft	22
101	1	320051100	Wobble bearing	25
102	1	339008460	Bearing washer	11
103	1	316074730	Bearing holder cpl. (B)	29
104	1	320051110	Ball bearing	15
105	1	339008470	Bearing cover (A)	13
106	1	340037680	Bevel gear	20
107	1	341720370	M5 seal ock bolt	12
108	1	342010860	Pressure spring	11
109	1	316074740	Lock plate compl.	26
110	1	316074750	Inner cover(B) ass’y	20
111	1	344104360	O-ring	20
112	1	316074760	Inner cover(A) ass’y	30
113	1	344060310	Felt packing	11
114	1	339008480	Packing washer	12
115	1	344114290	O-ring	11
116	1	344103940	Rubber cap	11
117	1	344070680	Felt seal	13
880	1	344130800	Grease FG 126	26
1001	1	338510720	Diagram	