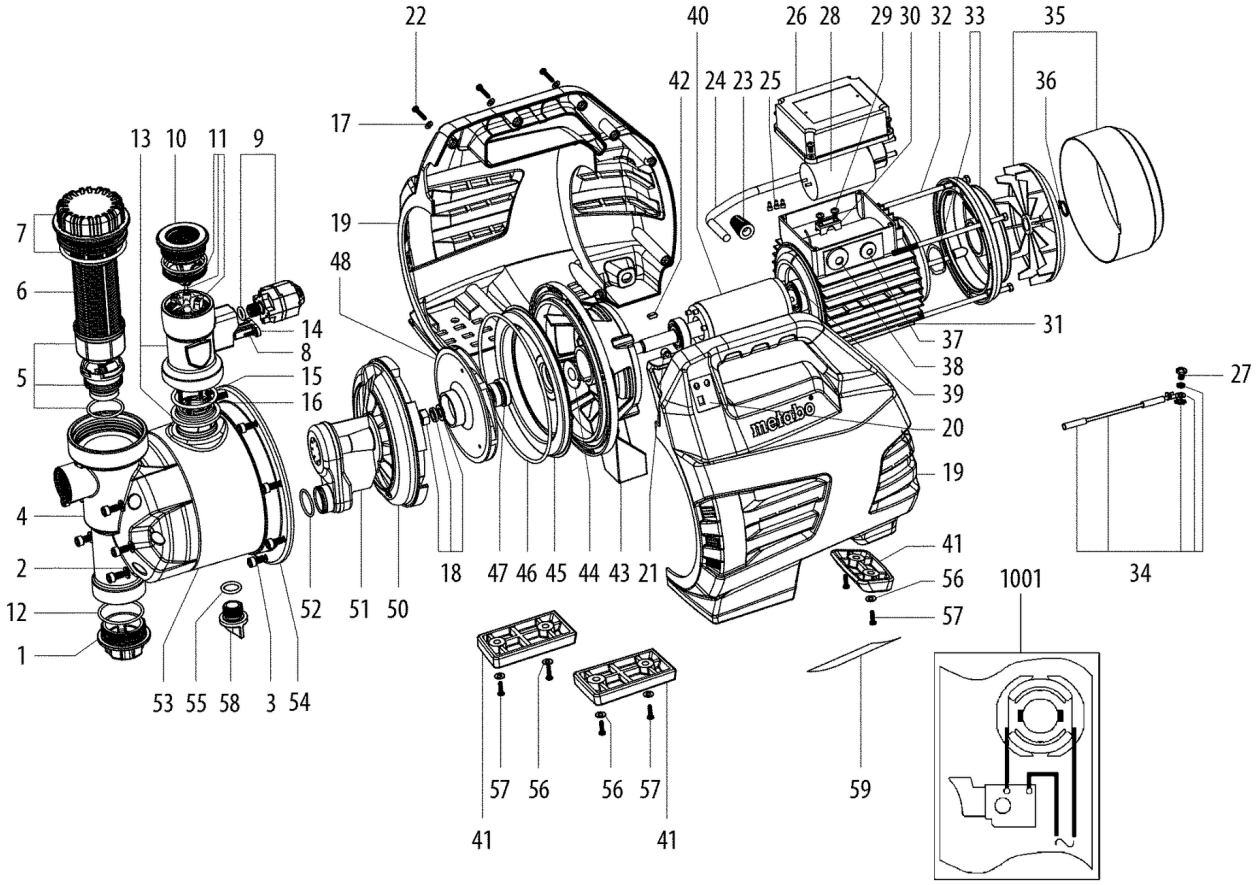
22
40
26 28
29 30 32 33
35
42 24 23 25
36
17
13 10 11 9
19
7
48
6
14
8
15
16
5
31
37
38
39
27
20
19
4
2
12
1
18 47 46 45 44 43 21
41
56
57
1001
34
52 51 50
53 55 58 3 54
57 56
56 57
41
41
59

Številka	Znesek	Številka za naročanje	Opis	PG
1	1	343440720	Cover	11
2	6	339009270	Washer	11
3	14	341722060	Screw	11
4	1	341165290	PUMP HEAD	26
5	1	316060340	CHECK VALV compl.	22
6	1	343440670	Filter	22
7	1	316060350	Filtre cover compl.	17
8	4	341722090	Screw	11
9	1	316060200	pressure sensor cpl.	20
10	1	339147570	Connector	20
11	1	316060190	FLOW PROTECTION cpl.	14
12	2	143195660	O-ring	11
13	1	316060180	Clamping piece cpl.	20
14	1	343084630	sensor	19
15	1	143195650	O-ring	11
16	4	341722100	Screw	11
17	13	339009240	Washer	11
18	1	316060210	clamp kit cpl. (impeller)	11
19	1	316060220	Housing compl.	30
20	1	343440630	Switch	18
21	1	343084620	Printed circuit	35
22	11	341722120	Screw	11
23	1	344112900	Cable sleeve	11
24	1	344112910	Cable	24
25	4	341165220	Cable binder	11
26	1	341165260	LID, TERMINAL BOX	13
27	5	341722130	Screw	11
28	1	343254890	Condenser	21
29	4	341705150	Screw self-tapping	11
30	3	343436720	Cable clip	11
31	1	316060360	Stator compl.	42
32	4	341722050	Screw	11
33	1	316060240	Motor flange compl.	25
34	1	316060250	Cable compl.	13
35	1	316060300	Fan with fan cover	18
36	1	342024010	Circlip	11
37	1	344112880	Cable sleeve	11
38	1	344112890	Cable sleeve	11
39	2	320050840	Ball bearing	15
40	1	310011360	ARMATURE	32
41	1	316060260	Foot compl.,back	18
42	1	341161690	Slide block	11
43	1	315419040	Motor flange	30
44	1	343435670	Sealing washer	11
45	1	341039610	Flange	25
46	1	143195550	O-ring	12
47	1	344099860	Gasket	21
48	1	343436790	Wheel	19
50	1	343440740	DIFFUSOR	20
51	1	341161730	Tube (f. valve)	17
52	1	143195540	O-ring	11
53	1	341165180	Pump housing	41

Številka	Znesek	Številka za naročanje	Opis	PG
54	2	143195670	O-ring	11
55	1	143195620	O-ring	11
56	6	339009290	Washer	11
57	6	341722080	Screw	11
58	1	341722140	THREADED PLUG	11
59	1	338061270	Rating plate	11
77	1	343448370	FILTER WRENCH	13
99	1	399999990	Part not needed	
1001	1	338510460	Wiring diagram	