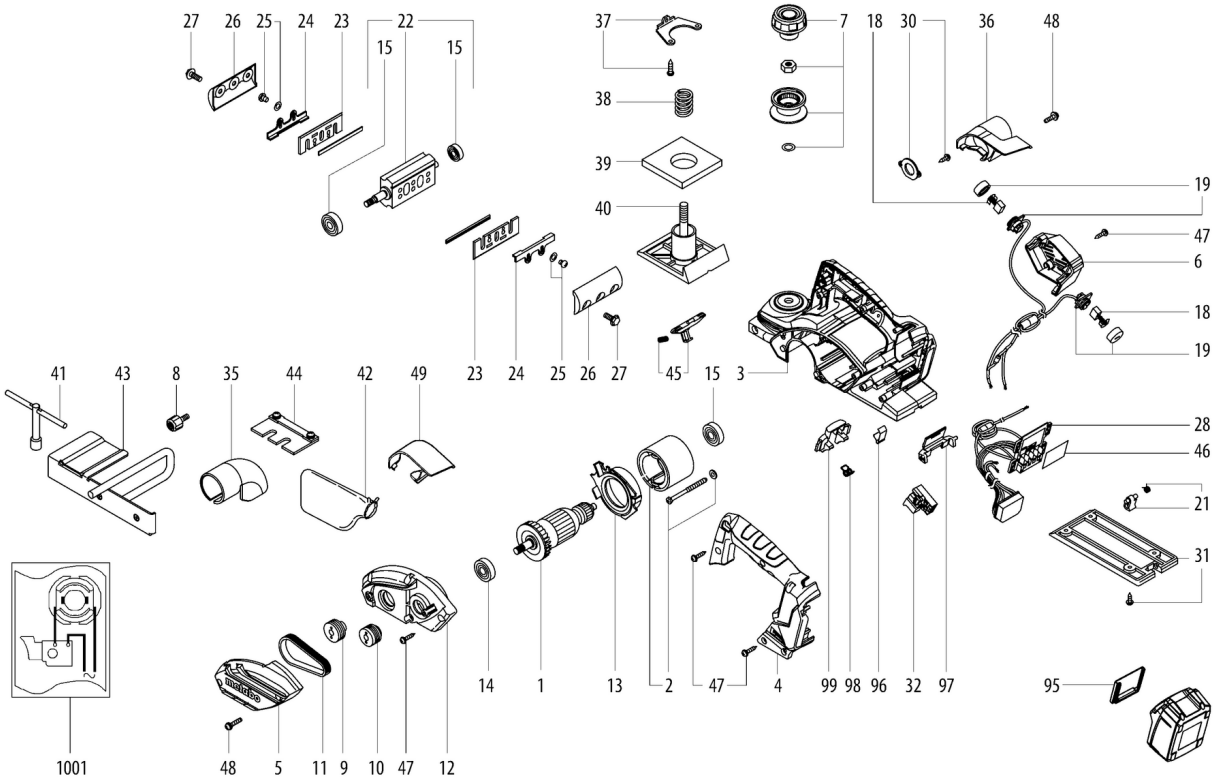
27
26
25
24
23
22
15
15
37
38
39
40
7
18
30
36
48
19
47
6
18
19
41
43
8
35
44
42
49
23
24
25
26
27
45
15
3
28
46
21
31
1001
48
5
11
9
10
47
12
14
1
13
2
47
4
99
98
96
32
97
95

Številka	Znesek	Številka za naročanje	Opis	PG
1	1	310012400	Armature compl.	36
2	1	311012740	Field coil compl.	32
3	1	343445310	Housing	35
4	1	343445320	Handle cover	25
5	1	343447000	housing	19
6	1	343445330	motorcover	16
7	1	343446990	Shift knob	25
8	1	343445350	Ster grip screw	11
9	1	341212420	Toothed belt pulley in the front	19
10	1	341212430	Toothed belt pulley rear	17
11	1	341203240	belt	19
12	1	343445870	Motor housing (f. bearing)	25
13	1	339153530	Air baffle	12
14	1	143115650	Ball bearing, 10x30x9	14
15	3	143115800	Ball bearing, 8x22x7	13
18	1	316066340	Carbon brush set	19
19	1	316066350	Carbon brush holder compl.	29
21	1	316096530	LOCK cpl	13
22	1	316096500	Cutter block compl.	37
23	1	316096520	Set Retaining plate (B) cpl.	22
24	2	316096510	Set Retaining plate (A)	13
25	1	316096540	RETAINING SCREW cpl.	12
26	1	316096550	Blade holder set	20
27	1	316096560	RETAINING SCREW cpl.	13
28	1	343086350	Suppressor	39
30	1	316096580	Cover (f. bearing) compl.	13
31	1	316096590	Planer table rear cpl.	30
32	1	343411690	Switch	29
35	1	343445850	Angle piece	15
36	1	343445490	Adaptor	13
37	1	341166700	UNION cpl.	13
38	1	342052340	Spring	11
39	1	344113720	Rubber pad	15
40	1	316096610	Planer table in the front	25
41	1	344199320	Socket spanner,10mm	14
42	1	344113730	Dust bag	22
43	1	331054740	Parallel guide	26
44	1	339148880	GAUGE	18
45	1	316097040	Upper Guard Cover cpl.	13
46	1	338068820	Rating plate	12
47	11	141124210	Fillister head screw	11
48	3	141113200	Fillister head screw	11
49	1	344114510	CHIP GUIDE	14
95	1	343439680	Cover cap	11
96	1	342051090	Flat spring	11
97	1	343439450	Locking piece	12
98	1	342022510	Spring	12
99	1	343445340	Sliding trigger	13
1001	1	338506340	Wiring diagram	