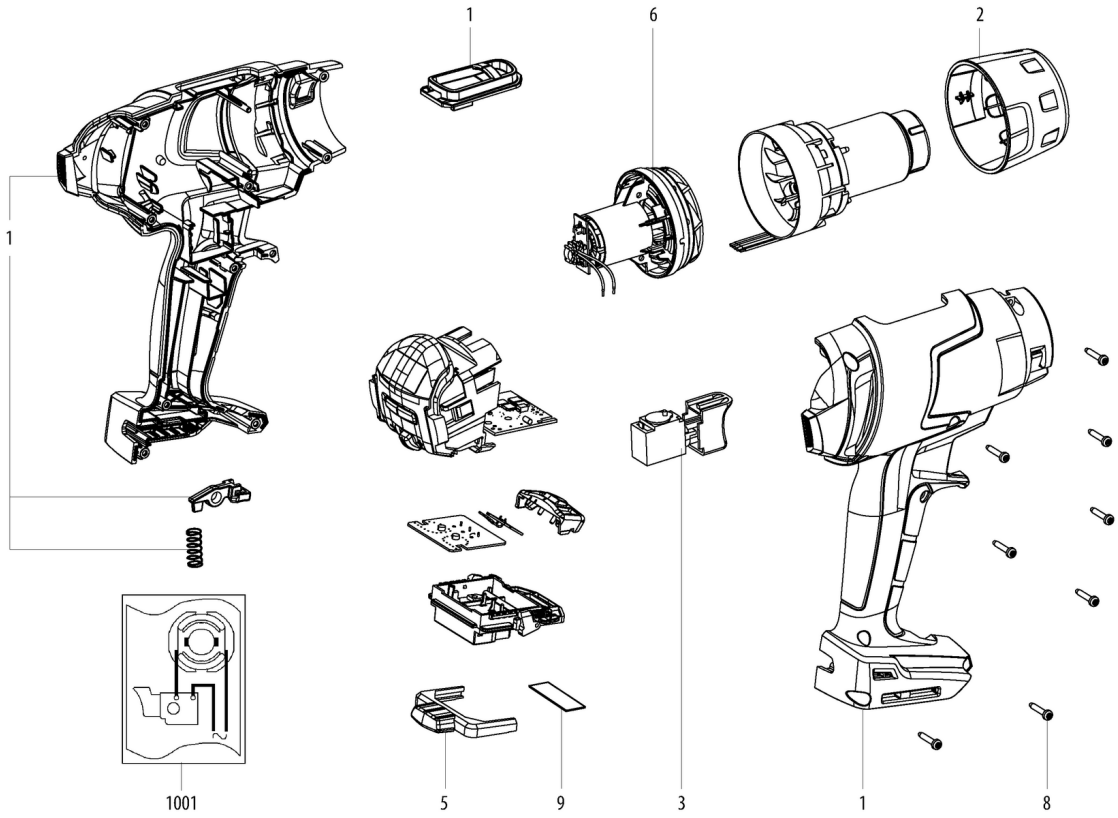
1
6
2
1
1001
5
9
3
1
8

Številka	Znesek	Številka za naročanje	Opis	PG
1	1	343451710	Housing compl.	36
2	1	343451720	Protective tube	15
3	1	343412380	Poti switch	20
5	1	343447510	Locking slide	11
6	1	317005290	Motor unit	30
8	8	141121960	Self-tap. fill. h. screw	11
9	1	338072960	Rating plate	12
66	1	316066720	Latch compl.	14
67	2	342004180	Pressure spring	11
1001	1	338510560	Wiring diagram	