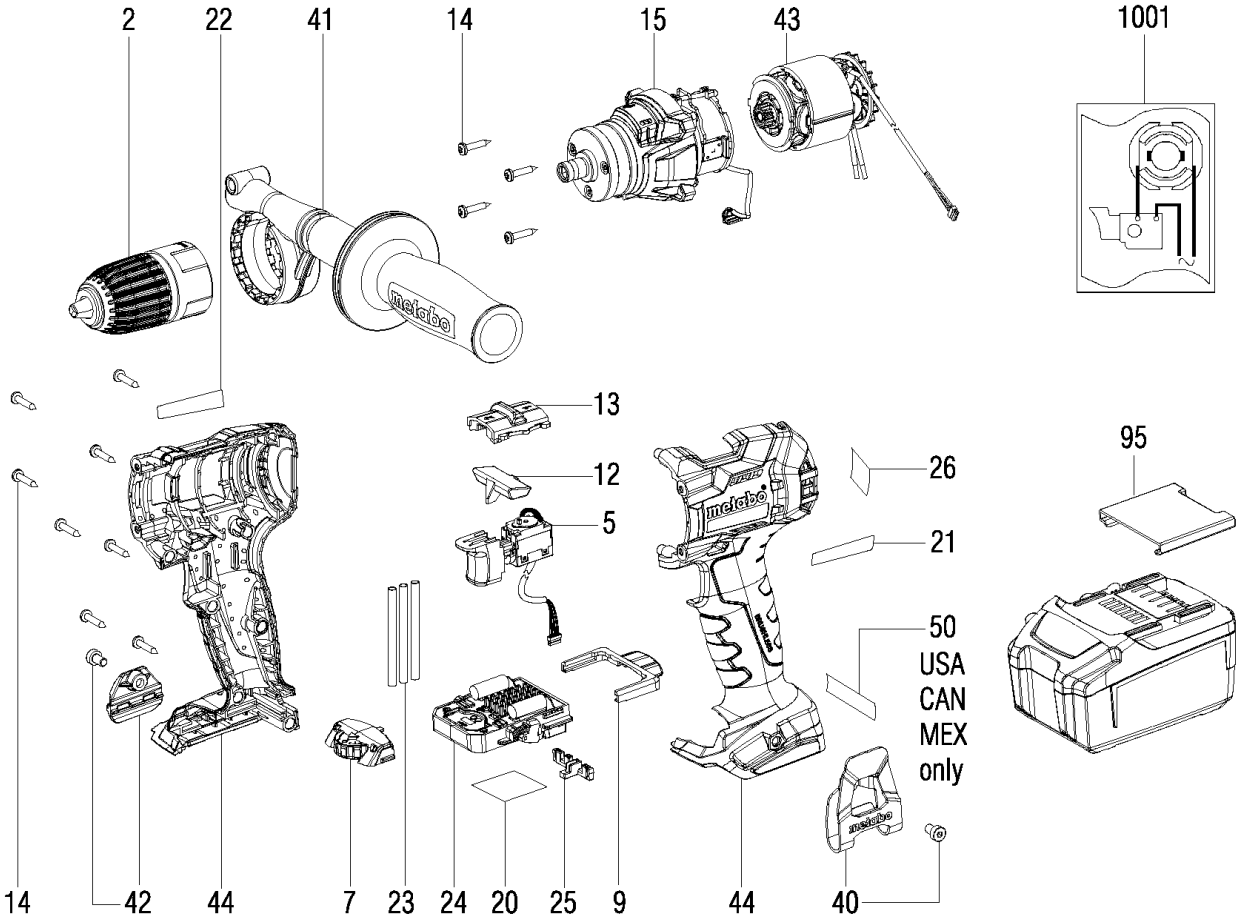
2
22
41
14
15
43
1001
13
12
5
26
21
50
USA
CAN
MEX
only
95
14
42
44
7
23
24
20
25
9
44
40

Številka	Znesek	Številka za naročanje	Opis	PG
2	1	627237000	Quick change thread drill chuck Futuro	
5	1	316081560	poti-switch DX13	24
7	1	316070640	Selector wheel compl.	26
9	1	343447510	Locking slide	11
12	1	343447500	Switch slide	11
13	1	316051650	Switch slide compl.	13
14	12	141113180	Self-tap. fill. h. screw	11
15	1	316068850	Gear-box compl.,GB Quick	41
20	1	338073510	Rating plate	12
21	1	338132270	Type label left,GB 18 LTX BL	13
22	1	338132280	Type label right,GB 18 LTX BL	13
23	3	339041310	insulating hose	11
25	1	343088220	Electronic unit, GB18LTXBL 2G Facelift	49
26	1	338129960	Indication label, CAS	12
40	1	339137270	Hook	13
41	1	314001560	Side support handle compl.	21
42	1	343448690	bit-depot 18 V	13
43	1	316069560	Motor compl.	43
44	1	316068720	housing w. cover	30
66	1	316066720	Latch compl.	14
67	2	342004180	Pressure spring	11
95	1	343439680	Cover cap	11
1001	1	338506670	wiring diagram	