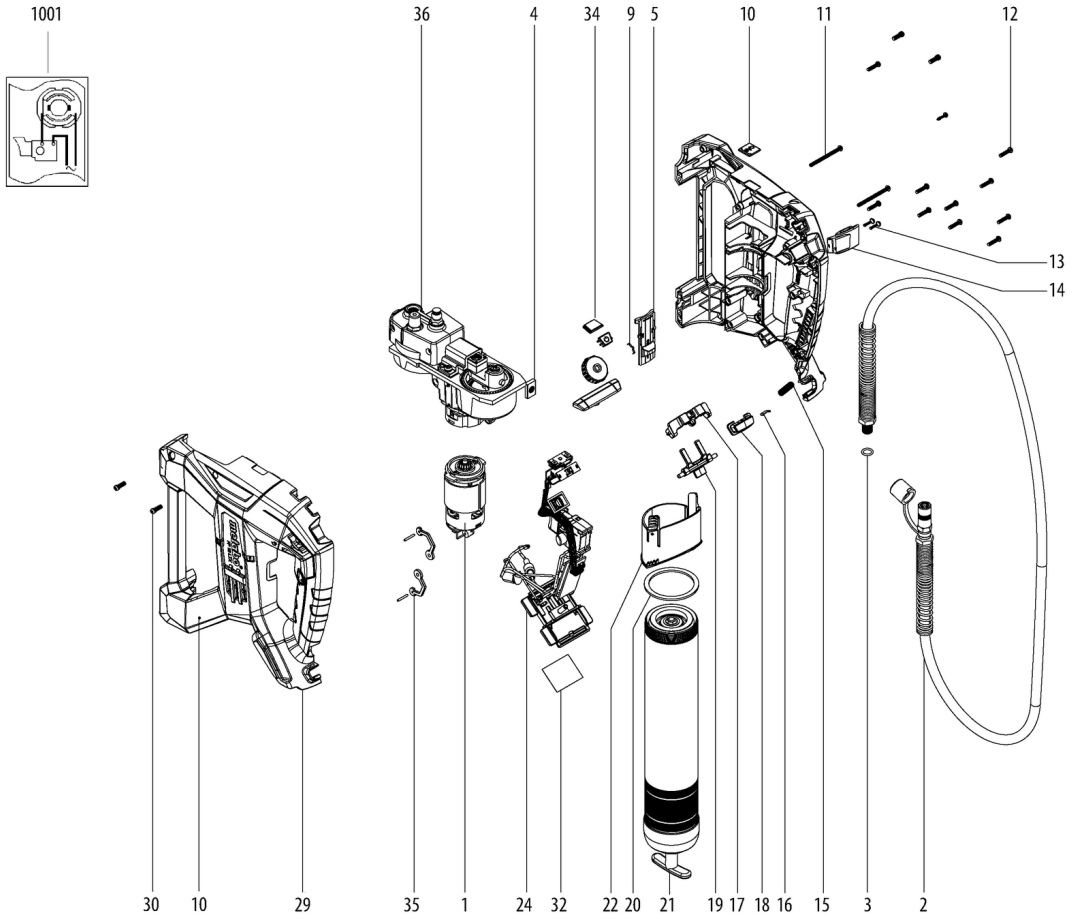
1001
36
4
34
9
5
10
11
12
13
14
30
10
29
35
1
24
32
22
20
21
19
17
18
16
15
3
2

Številka	Znesek	Številka za naročanje	Opis	PG
1	1	317005440	Motor	32
2	1	344115080	Hose with grease nipple	37
3	1	339009600	O-ring	14
4	1	341106910	Square nut	12
5	1	343412890	Switch slide	13
10	1	338129960	Indication label, CAS	12
11	2	341724100	Screw	12
12	11	341724110	Screw	12
13	2	141124170	Fillister head screw	11
14	1	339141570	Grease Hose holder	14
15	1	342001770	Pressure spring	11
16	1	343458930	FASTENING CLIP	11
17	1	343440150	Pressure plate	11
18	1	343440140	Press button	11
19	1	343410570	Switch slide	11
20	1	341106920	Sealing ring	12
21	1	339141580	Tube 400g	34
22	1	343412910	Cover ring	19
24	1	316075260	Switch with elektronic	47
29	1	343412930	Housing L/R	32
30	4	341706950	Ball-head srew	
32	1	338079210	Rating plate 00789000 FP 18 LTX	13
34	1	316075190	Operating device cpl	22
35	1	316075270	hook compl.	20
36	1	316075280	Gear-box compl.,400g	50
1001	1	338510860	Diagram	